1890–1990

CITY OF EDMONDS

STANDARD DETAIL

DOUBLE CHECK DETECTOR ASSEMBLY (DCDA) FOR 2"-3"

REVISIONS	
APPROVED BY	DATE

DATE	SCALE	DWG NO.
4/2/07	NTS	E7.7.1

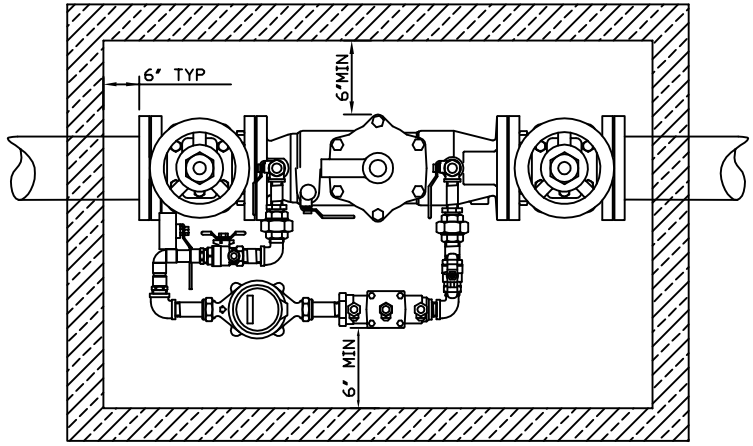

TOP VIEW

1. THE DCDA SHALL BE A WASHINGTON STATE APPROVED– MODEL SHALL BE WATTS 007DCDA OR APPROVED EQUAL.
2. VAULT MUST BE UTILITY VAULT MODEL OR APPROVED EQUAL.
   FOR 2in. DCDA: UTILITY VAULT #644–LA
   FOR 3in. DCDA: UTILITY VAULT #675–LA
3. LIDS FOR VAULT SHALL BE LW HATCH– WATERTIGHT WITH GUTTER AND SIDE DRAIN. SIZE SHALL BE 3' WIDE X 6' LONG.
4. APPROVED DOUBLE CHECK DETECTOR ASSEMBLY TO LAY HORIZONTAL WITH THE GROUND.
5. TEST COCKS TO EITHER FACE OUTWARDS OR UPWARDS FROM ASSEMBLY.
6. ALL TEST COCKS MUST BE PROVIDED WITH PVC PLUGS.
7. THOROUGHLY FLUSH LINES PRIOR TO INSTALLATION OF ASSEMBLY.
8. DO NOT INSTALL IN AN AREA SUBJECT TO FLOODING.
9. MUST BE PROTECTED FROM FREEZING CONDITIONS.

* SIZE OF PIPE USED DICTATES MINIMUM DEPTH OF BOX INCLUDING REQUIRED CLEARANCES.

** HEIGHT TO TOP OF STEM BASED ON THE SIZE OF PIPE USED.

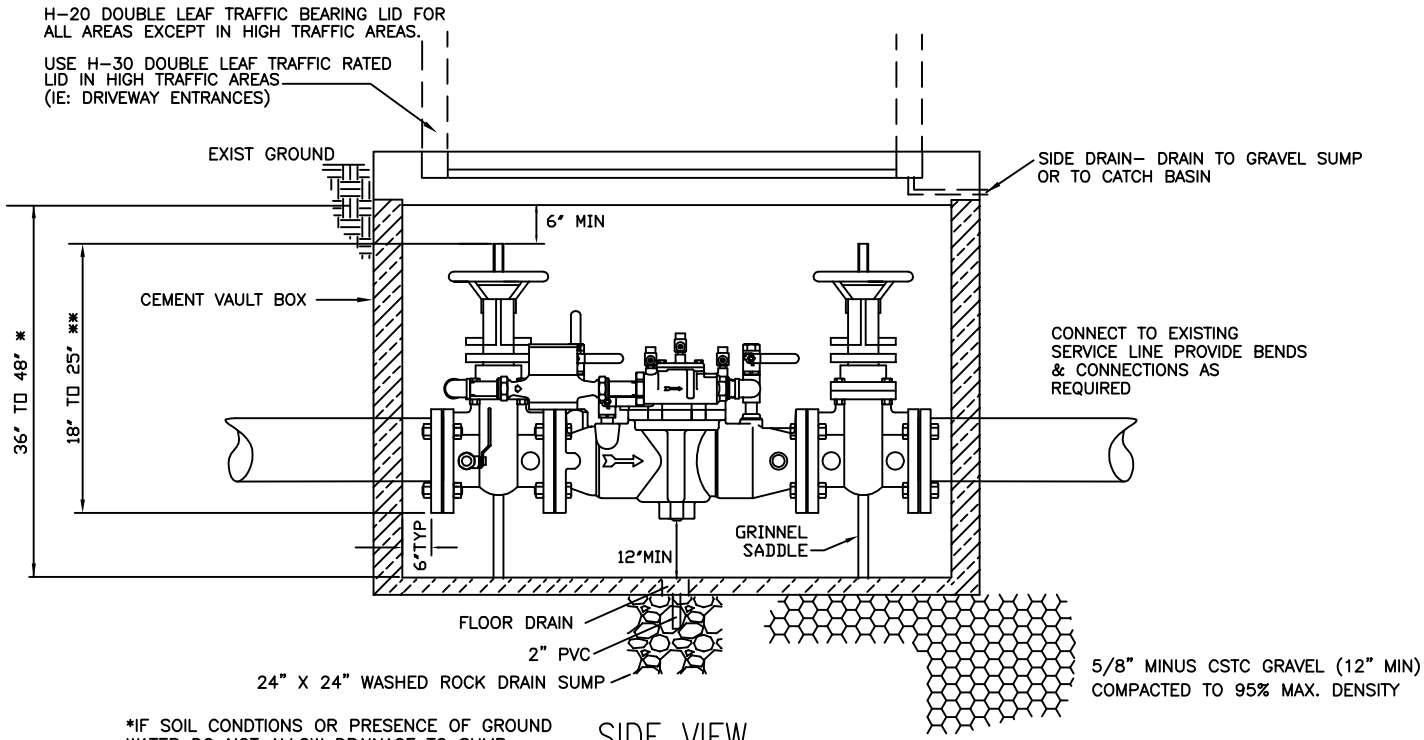

*IF SOIL CONDTIONS OR PRESENCE OF GROUND WATER DO NOT ALLOW DRAINAGE TO SUMP, DRAIN SHALL BE TIGHTLINED OR PUMPED TO ONSITE DRAINAGE SYSTEM.

SIDE VIEW

MUST BE TESTED AFTER INSTALLATION AND YEARLY THEREAFTER BY A WASHINGTON STATE CERTIFIED DCDA ASSEMBLY TESTER. THE TEST REPORT MUST BE SENT TO THE CITY OF EDMONDS WATER DIVISION