APPROVED AIR GAP SEPARATION

AN APPROVED AIR GAP IS A PHYSICAL SEPARATION BETWEEN THE FREE FLOWING DISCHARGE END OF A POTABLE WATER SUPPLY PIPELINE AND THE OVERFLOW RIM OF AN OPEN OR NON-PRESSURE RECEIVING VESSEL. THESE VERTICAL, PHYSICAL SEPARATIONS MUST BE AT LEAST TWICE THE DIAMETER OF THE INLET PIPE BUT NEVER LESS THAN ONE INCH. IF SPLASHING IS A PROBLEM, TUBULAR SCREENS MAY BE ATTACHED OR THE SUPPLY LINE OUTLET MAY BE CUT AT A 45 DEGREE ANGLE. IF SUPPLY LINE IS CUT AT A 45 DEGREE ANGLE THE AIR GAP DISTANCE IS MEASURED FROM THE CENTER OF THE ANGLE. HOSES ARE NOT ALLOWED. BYPASSES ARE NOT ALLOWED. THE INSPECTION OF AIR GAPS SHALL BE INCLUDED IN THE YEARLY TESTING PROGRAM FOR BACKFLOW DEVICES.

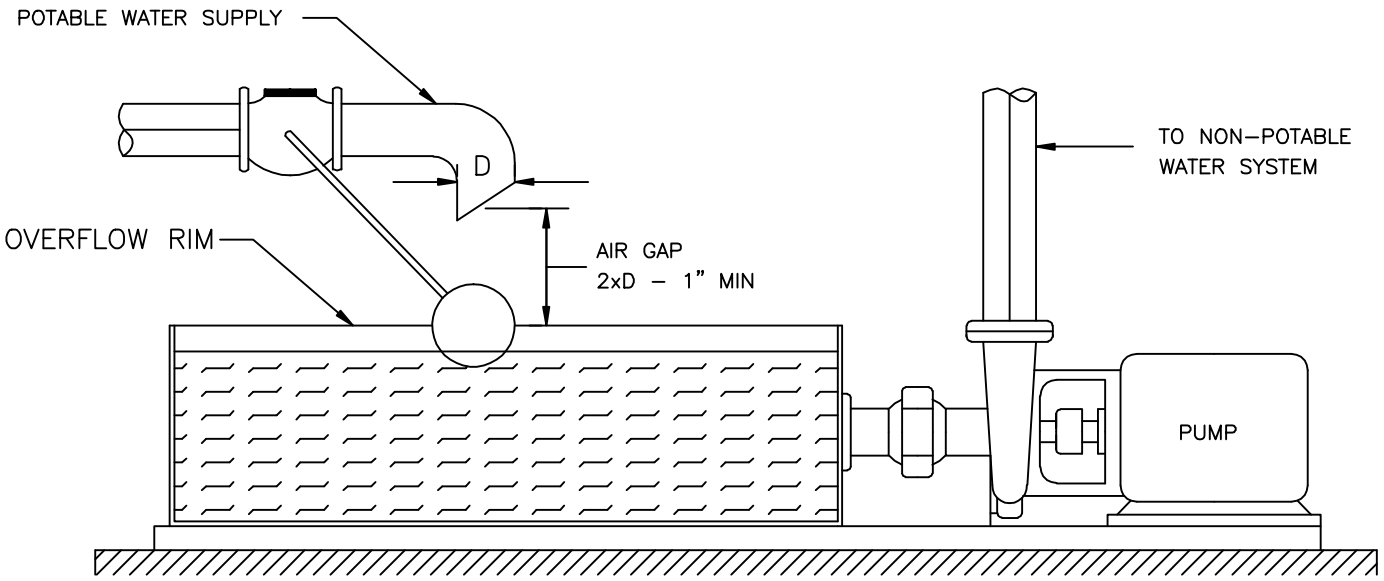

CITY OF EDMONDS

Est. 1890

REVISIONS	
APPROVED BY	DATE

STANDARD DETAIL

AIR GAP FOR MAKEUP TANK (AG)

DATE	SCALE	DWG NO.
6/16/03	NTS	E 7.15