APPENDIX G

THIS PAGE INTENTIONALLY LEFT BLANK

July 24, 2001

FOREWORD

Pursuant to Edmonds Community Development Code (ECDC) 18.00.040, these City of Edmonds Construction Standard Details and Specifications, hereinafter referred to as "**Edmonds Standard Details**", shall apply whenever any public or private work is performed within the City of Edmonds, including work performed by private parties at their own expense. City capital improvement projects will be required to meet all the conditions within these standards unless the City Engineer approves an exception from the design standard in effect at the time of construction. Except where these Edmonds Standards Details provide otherwise, design, construction and materials shall conform to the appropriate standards of the most current edition of the following publications produced separately by Washington State Department of Transportation (WSDOT) or jointly by WSDOT and Washington State Chapter of the American Public Works Association (APWA).

- WSDOT/APWA Standard Specifications for Road, Bridge and Municipal Construction, hereinafter referred to as "WSDOT/APWA Standard Specifications".

- WSDOT/APWA Standard Plans for Road, Bridge and Municipal Construction, hereinafter referred to as "WSDOT/APWA Standard Plans".

The City Engineer is hereby delegated the authority to allow minor deviations to these standards after review of evidence submitted by the developer, establishing that such modifications are equal to or better than the requirements in these standards, that they are in the public interest, that they are based upon sound engineering practices and judgment, and that requirements for safety, function, appearance and maintainability are fully met. **Such deviations from the standards must be submitted, reviewed and approved in writing by the City Engineer prior to construction.** The City Engineer will make the decision as to whether a requested deviation or alternative will be allowed.

Revisions to these Edmonds Standard Details may be issued periodically by the City Engineer as necessary to make corrections or clarifications or to conform to current municipal practices, state or federal standards and new technology. Such revisions will be formally issued by the City Engineer in writing, entered into the Standard Details and recorded in the Revision Log.

NOEL MILLER, P.E.
Public Works Director

EDMONDS STANDARD DETAILS

Modifications to Standard Specifications Log

Revision Date	Title
	Modifications to Division 2 of Technical Specifications (Earthwork)
01/01/04	Modifications to Divisions 3 through 8
01/01/04	Modifications to Division 9 of Technical Specifications (Materials)
01/01/04	Material Modifications to Divisions 7, 8 and 9

2.09 STRUCTURE EXCAVATION

2.09.1 Description

This section covers the work necessary for trench excavation and backfill for all pipelines, complete.

A. Trench Excavation

Excavation is unclassified. Complete all excavation regardless of the type of materials encountered. The contractor shall do an estimate of the kind and extent of the various materials that will be encountered in the excavation.

B. Type of Bedding

Bedding consists of pipe base and pipe zone material. Pipe zone material shall be required for all pipe. Pipe base material will be required for pipes except ductile iron pipe. Pipe base material for ductile iron shall be required when, in the opinion of the Engineer, the native trench bottom is not suitable for laying pipe.

C. Types of Backfill

For bidding purpose, the class of backfill to be used above the pipe zone is indicated on the plans or class C if not shown. The City reserves the right to modify the use, location, and quantities of the various types of backfill during construction according to the established bid item prices. The Engineer will designate the type of backfill to be used in each location throughout the construction of the project. The general classifications of backfill are as listed below:

1. Class B

Class B backfill will be used in unsurfaced areas where compaction and subsequent settlement are not critical.

2. Class C

Class C backfill will be used in unsurfaced areas or road shoulders where reseeding, sod replacement, or shoulder replacement will be required. Compaction in these applications is important, as the subsequent settlement must be held to a minimum.

3. Class D

Class D backfill will be used in unsurfaced and surfaced areas where compaction is critical to ensure that no settlement occurs. Pavement replacement and shoulder replacement will be made shortly after backfilling.

D. Water for Trench Compaction

The contractor shall make all arrangements for a source of water. All City water shall be metered and supervised by the City. The contractor shall be responsible for any deposit fees.

E. Concrete

Concrete shall be as specified in **Section 6-02.3 Concrete Structures** and shall have a minimum twenty-eight (28) day compressive strength of 3000 psi.

2.09.3 Construction Requirements

A. Surface Preparation for Excavation

Conform to subsection 2.01.1 Clearing

B. Trench Excavation and Shoring

1. Open Trench Limited

The length of trench excavated in advance of the pipe laying operation shall be kept to a minimum, and in no case shall it exceed three hundred (300) feet, unless specifically authorized by the Engineer.

2. Trench Width

Contractor shall conform to state and federal laws. Minimum width of unsheeted trench in which pipe is to be laid shall be eighteen (18) inches greater than the outside diameter of the pipe, or as approved. Sheeting requirements on each side shall be independent of trench widths.

The maximum permissible trench width from the bottom of the trench to the crown of the pipe shall be as follows:

15 inch diameter and smaller	40 inches
18 inch diameter and larger	1-1/2 times the inside diameter of the pipe plus 18 inches

If the maximum trench width at the crown of the pipe is exceeded by the contractor without the written authorization of the Engineer, the contractor will be required, at his own expense, to provide pipe of higher strength classification or to provide a higher class of bedding, as approved by the Engineer.

Maximum permissible trench widths shall be as shown on the plans. If the maximum permissible trench width is exceeded, contractor shall be solely responsible for all costs associated with the additional trench width including, but not limited to, backfill and surface restoration.

3. Trench Safety Systems

Safety systems shall be provided in conformance to Washington Industrial Safety and Health Act, Chapter 49.17 RCW.

4. Grade

Excavate the trench to the lines and grades shown or as established by the Engineer (Section 1-05.4) with proper allowance for pipe thickness and for pipe bedding (base) material as required. If the trench is excavated below the required grade, correct any part of the trench excavated below the grade with material of the type specified for pipe bedding at no additional cost to the City.

5. Bell (Joint) Holes

At the location of each joint, the contractor shall dig bell (joint) holes of ample dimensions in the bottom of the trench and at the sides where necessary to permit the joint to be made properly and to permit easy visual inspection of the joint.

6. Disposal of Excess Excavated Material

Contractor shall make arrangements for the disposal of all excess material and bear all costs.

7. Shoring, Sheeting, and Bracing of Trenches

All sheeting, shoring, and bracing of trenches shall conform to the safety requirements of the federal, state, or local public agency having jurisdiction and as required to protect the pipe. The most stringent of these requirements shall apply.

8. Location of Excavated Materials

During trench excavation, contractor shall place the excavated material only within the construction easement, right-of-way, or approved working area in such a manner that it will cause a minimum of inconvenience to the traveling public and provide for merging traffic where necessary. Contractor shall not obstruct both lanes of traffic on any private or public traveled roadways or streets. The contractor shall also take the necessary steps to control erosion of the excavated material.

C. Dewatering

The contractor shall furnish, install, and operate all necessary machinery, appliances, and equipment to keep excavations free from water during construction, and shall dewater and dispose of the water so as not to cause injury to public or private property or to cause a nuisance or a menace to the public.

D. Bedding

1. General

Where no reference is made to the classification of bedding on the plans or in the special conditions, bedding shall be selected granular bedding.

When, in the opinion of the Engineer, selected bedding material is unsatisfactory, the contractor shall furnish imported granular bedding material which has been approved by the Engineer.

2. Pipe Base

Level the bottom of the trench or the top of the foundation material at such elevations as shown on the plans. Base material shall provide a firm support along, entire pipe length. If the trench is over excavated, rebuild the over excavated section of the trench with compacted, imported granular pipe base material at no additional cost to the City.

Pipe base shall be considered to cover the full width of the excavated trench from the bottom of the trench or top of foundation stabilization material to the top of the base as specified or as shown on the plans.

3. Pipe Zone

After the pipe is in place and ready for backfilling, place pipe zone material at approximately the same rate on each side of the pipe to insure proper alignment. The material shall be rammed and tamped around the pipe by the use of shovels or other approved hand-held tools so as to provide firm and uniform support over the full length of all pipe, valves and fittings. Care shall be taken to prevent any damage to the pipe.

4. Concrete Bedding

Concrete bedding shall be placed in special areas as shown on the plans.

E. Trench Backfill

1. General

When backfill is placed mechanically, push the backfill material onto the slope of the previously placed and allow the material to slide down into the trench. Do not push backfill into the trench in such a way as to permit free fall until two (2) feet of cover or more is provided over the top of the pipe. Under no circumstances, allow sharp or heavy pieces of material to drop directly onto the pipe or the tamped material around it. All backfill, regardless of class, shall be placed in successive layers not to exceed eight (8) inches in loose thickness and each layer shall be compacted to the density specified herein. At no time shall backfill material be placed in the trench if the moisture content exceeds two percent (2%) of optimum moisture for the approved backfill material. If the moisture content is less than two percent (2%) of the optimum, additional water may be required based on the recommendations of the City's soils testing consultant or approval from the City Engineer.

Backfilled trenches shall be reasonably smooth, free from ruts and material neatly windowed over the trench and excess removed. **If the trench is over driveways, roadways or paved shoulders, the surface shall be temporarily covered with two (2) inches of cold mix per the standard trench detail.** Unpaved surfaces shall have material neatly mounded not more than six (6) inches above the existing ground for the entire width of the trench. Estimate and provide the amount of backfill material required so after normal settlement, the finished surface will meet the existing grade. Any excess or deficiency after normal settlement shall be corrected accordingly.

Screen all boulders and stones from the backfill material that are two (2) inches in diameter or larger in the upper twelve (12) inches of the backfill.

When, in the opinion of the Engineer, selected backfill material is unsatisfactory, the contractor shall furnish imported backfill material as approved by the Engineer.

2. Class B Backfill

Backfill the trench above the pipe zone and compact to ninety percent (90%) of maximum density as determined by ASTM D1557 (see 1-06.2). Determine the type of compaction required to prevent subsequent settlement.

3. Class C Backfill

Backfill the trench above the pipe zone and compact to ninety percent (90%) of the maximum density as determined by ASTM D1557 (see 1-06.2). Determine the type of compaction required to prevent subsequent settlement.

4. Class D Backfill

Backfill the trench above the pipe zone with approved backfill material to a minimum of ninety-five percent (95%) as determined by ASTM D1557 (see 1-06.2).

If the native material does not comply with the specifications, the contractor shall use imported material as approved by the Engineer.

5. Maintenance of Trench Backfill

Any subsequent settlement of the finished surface during the warranty period shall be considered a result of improper or insufficient compaction and/or excessive moisture content and shall be promptly repaired by the contractor at no cost to the City.

Maintain the backfilled trench surface until the following applicable operations have been completed and approved by the Engineer:

a. Service connections, installed and backfilled.
b. Valves, valve boxes, and hydrants installed.
c. Pressure testing.
d. Cleaning, flushing, and sterilization.
e. Cleanup and restoration of all physical features.
f. Utilities restored to their original condition or better.
g. All work required between the two valves or manholes accomplished, with the exception of final surfacing.

This maintenance shall include, but not limited to, keeping the surface of backfilled trenches reasonably smooth, free from ruts and potholes, and suitable for normal traffic flow, where applicable.

No additional payment will be made for the maintenance of the trench backfill before completion of the work outlined above, except for cold mix asphalt when directed or requested by the Engineer.

No final pavement replacement shall be undertaken until all items outlined above have been completed and approved by the Engineer.

Maintenance of backfilled trenches is considered to be incidental to this item of work, and payment for such maintenance will be considered as included in payment for class of backfill.

F. Compaction of Backfill

Mechanical compaction is generally recommended for trenches. Contractor will supply, operate and maintain the proper equipment to compact the classification of material relative to the field conditions. Water settlement may be used to compact sand, pit run, and gravel type backfills. If the contractor desires to use water settling, he shall submit in detail to the Engineer for approval, the procedure to be used. The contractor, as directed by the Engineer and at no additional cost, shall excavate test holes to review the effectiveness of compaction. If, in the opinion of the Engineer, the specified compaction and densities are not being achieved in accordance with 1-06.2, the contractor shall recompact the backfill material. If required, water saturated material shall be removed, dried, and placed back in lifts or replaced with imported backfill material. The contractor shall be responsible for all costs for labor, materials, and delays resulting from improper compaction and recompaction.

G. Embankments

1. Structural Embankment

Construct embankment to support the pipeline in accordance with the details shown on the plans. Spread excess excavated trench material in maximum one (1) foot lifts for the full width of the embankment cross section and compact to a minimum of ninety-five percent (95%) of maximum density for the full depth of the fill as determined by ASTM D1557 (see 1-06.2). Compact the embankment to its final cross section before the trench excavation for the pipe is made.

2. Additional Pipe Cover

In locations where insufficient pipe cover exists, place selected native material over the pipe as shown or directed to provide a minimum cover of three (3) feet. Slope pipe cover to prevent blockage of surface runoff. No additional payment will be made for furnishing additional pipe cover.

H. Drainage Ditch Restoration

Undercrossings of ditches shall be backfilled with imported granular backfill material or as approved to within the top one (1) foot of the ditch bottom. Place approved rock or rip-rap material in the top foot. Correct any ditch damage as a result of contractor's operations at no cost to the City. Payment for ditch restoration will be considered as incidental to the project.

I. Cold Mix Asphalt

Cold mix asphalt used for temporary repair of utility trenches or other small areas shall be placed by hand, then raked to a smooth and uniformly dense layer before compacting.

On large areas, which have been determined by the Engineer to be temporarily repaired with cold mix asphalt, the mix shall be spread with mechanical spreading equipment, such as a "Layton Paver," to a smooth and uniformly dense layer before compacting. In areas inaccessible to the mechanical spreading equipment, cold mix shall be placed by hand.

J. Resurfacing

Resurfacing, including asphalt patching, graveling, and landscaping shall be performed after the maintenance of trench backfill.

K. Settlement

Any settlement observed in the backfill, embankment, or in structures, including pipelines and manholes built over compacted material or embankment within the warranty period will be considered to be caused by improper compaction methods and/or pumping due to excessive moisture and shall be corrected and repaired at no cost to the City. Pipelines and structures which have settled shall be removed and reconstructed to the original condition at time of acceptance at no cost to the City.

2.09.5 Payment

A. Unit Price

Payment shall be made at the unit prices as stated in the contractor's bid proposal for the backfill classification using imported materials. Native materials used for base, bedding and backfill shall be considered incidental to the unit price for pipe. Payment shall be

considered full compensation, including all labor, equipment, and materials for excavation, dewatering, backfill, compaction, hauling, maintenance, and testing, complete. Trench safety systems shall be at the unit bid price in the bid proposal.

Measurement shall be the length of the centerline of the pipe, fittings, and valves in place. Extra excavation and backfill at ends of pipes, fittings, and valves shall be considered incidental to the bid items. Trench excavation and payment for lump sum items shall not be paid for under this item.

STANDARD SPECIFICATIONS

CITY OF EDMONDS MODIFICATIONS
DIVISIONS 3 THROUGH 8

The following technical specifications shall be modified, clarified, or superseded as described below.

5-04 **ASPHALT CONCRETE PAVEMENT**

5-04.3(4) Rollers

Pneumatic tire rollers shall not be used unless specified in the Special Provisions.

5-04.3(17) Paving Under Traffic

Open trenches within the traveled way or auxiliary lane shall have a steel-plate cover placed over them. A wedge of suitable materials, if required, shall be placed for a smooth transition between the pavement and the steel plate at the discretion of the Engineer. Warning signs shall be used to alert motorists of the presence of the steel plates.

5-04.5 Payment

Payment for tack coat shall be incidental to the bid items. Cold patch or temporary patch, as directed by the Engineer, shall be paid for as a two (2) inch thickness per unit measure as defined in the proposal.

6-02 **CONCRETE STRUCTURES**

6-02.3(1) Classification of Structural Concrete

Class 3000 concrete, minimum 5 1/2 sack (94 pound sacks) mix, shall be used for all concrete work, including sidewalks, curb and gutter, curbs, retaining walls, and small structures.

6-02.3(6)A Weather and Temperature Limitations Protection of Concrete

A clear, not white, curing compound shall be brushed or sprayed on all exposed concrete immediately after the finishing work. Other protective measures for weather constraints are still required, including protection from excessive hot and cold temperatures (including wind chill).

6-02.3(12-13) Construction, Contraction, and Expansion Joints

The following requirements apply to all curb, curb and gutter, and sidewalk work. Full depth expansion joints, consisting of 1/2 inch thick premolded material (AASHO M213), shall be placed perpendicularly when abutting to existing improvements at each side of driveway cuts and at a maximum spacing of thirty (30) feet. Construction joints, consisting of a tooled two (2) inch cut or slice into the concrete pour, shall be placed at ten (10) foot intervals. Curb and gutter installations will require an additional two (2) inch cut or the installation of a 1 inch x 4 inch wedge into the heel of the pour. Tooled contraction joints shall be provided at five (5) foot intervals or as required to match existing improvements. All work shall be perpendicular and straight.

6-02.3(14) Finish Concrete Surfaces

The finished improvements shall be true to grade, straight with smooth transitions or curves. Grade checked with a ten (10) foot straight edge placed anywhere on the slab in any direction and shall not deviate more than one-eighth (1/8) inch, and alignment shall not vary more than one-fourth (1/4) inch.

The finish shall be a light broom finish as approved by the Engineer in 1-05.6 Inspections. The City will not accept finishes that are non-uniform, overworked, discolored, spalling, damaged by weather, or where a cement layer has formed.

7-04 STORM SEWERS

7-04.2 Materials

See approved material list MM-1 through MM-4.

7-04.3(1) Cleaning and Testing

All pipes shall be tested for exfiltration.

7-04.3(3) Add: Backfilling Storm Sewer Trenches

Storm sewer pipes shall be bedded and backfilled as specified in Section 2.09.

7-04.5 Payment

Same as water mains for pipelines. (See Section 7-11.5.)

7-05 MANHOLES, GRATE INLETS, DROP INLETS AND CATCH BASINS

7-05.3(5) Add: Connection to Existing Line, Catch Basin, Curb Inlet or Manhole (New Section)

Where shown on the plans, new sewer and/or stormwater pipes shall be connected to existing lines, catch basins, curb inlets and/or manholes. The Contractor shall be required to core drill into the structure, shape the new pipe to fit, and regrout the opening in a workmanlike manner. Where directed by the Engineer or where shown on the plans, additional structure channeling will be required.

7-05.4 Measurement

Replace paragraph four with:

Structure excavation Class B and structure excavation Class B, including haul, shall be included as part of the applicable unit or lump sum bid item.

7-05.5 Payment

Payment shall include adjustments of frames and grates to final grade. See Special Provisions.

7-08 GENERAL PIPE INSTALLATION REQUIREMENTS

7-08.3(1)C Bedding the Pipe

Pipe bedding for PVC pipe shall be placed to a depth of 6" below the bottom of the pipe and extending up 6" above the crown on all pipes.

The hand-placed bedding around the pipe and to a point 6 inches above the crown shall be rammed and tamped by use of shovels or other approved hand held tools so as to provide firm and uniform support over the full length of all pipes. All other requirements for pipe bedding shall be per Section 9.03.

Pipe bedding shall be considered incidental to the unit price for all pipe and no further compensation shall be made.

7-09 WATER MAINS

7-09.2 Materials

See approved material list MM-1 through MM-4.

7-09.3(11) Compaction of Backfill

See 1-06.2(1) Samples and Tests.

7-09.3(23) Hydrostatic Pressure Test

Tests shall be between valves and made after all corporation stops are installed. Test pressures shall be 200 psig with corps installed, 300 psig without, for eight (8) inch pipelines and smaller, 200 psig for ten (10) inch pipelines and larger. Tests shall be for fifteen (15) minutes at 300 psig, two hours at 200 psig. A pressure drop of fifteen (15) psig or failure to meet loss requirement shall constitute rejection.

7-09.5 Payment

Payment also shall include thrust blocks, couplings, and restrained joints. Special connections or connection to existing pipelines shall be considered incidental unless a separate bid item is in the proposal. Separate bid items shall include all materials, equipment, and labor to make the connections. See Special Provisions.

7-12 VALVES FOR WATER MAINS

See approved material list MM-1 through MM-4

7-14 HYDRANTS

See approved Material List MM-1 through MM-4.

7-15 SERVICE CONNECTIONS

See approved Material List MM-1 through MM-4.

7-17 SANITARY SEWERS

7-17.2 Materials

See approved materials list MM-1 through MM-4.

7-17.3(1) Protection of Existing Sewerage Facilities

Add: When extending an existing sewer, the downstream system shall be protected from construction debris by placing a screen or trap in the first existing manhole downstream of the connection. It shall be the Contractor's responsibility to maintain this screen or trap until the new system is placed in service and then to remove it. Any construction debris which enters the existing downstream system shall be removed by the Contractor at his expense, and to the satisfaction of the Engineer. When the first manhole is set, the outlet shall be plugged until acceptance by the Engineer.

7-17.3(2)A General

See Sections 1-05.4 and 1-05.5

7-17.3(2)I Add: Sewer Line Connections

Add: Unless otherwise approved by the Engineer, all connections of lateral sewers to new ductile iron pipe or existing mains shall be made through a cast iron saddle secured to the sewer main with stainless steel bands. The main shall be core drilled.

Concrete manholes shall be core drilled, and shall have either an "O" ring rubber gasket (i.e. Kore-N-Seal) meeting ASTM C-478, be manufacturer installed, or a sand collar.

7-17.4 Measurement

Add:

All costs associated with structure excavation Class B and structure excavation Class B, including haul, shall be included in other contract pay items.

Add:

Measurement of imported granular trench backfill material for Class D material shall be by the lineal foot of pipe trench as described in Section 2-09.

7-17.5 Payment

Add the following:

See the Special Provisions for a description of pay items utilized for the project.

9.03 AGGREGATES

9.03.16 Bedding Materials

A. Rigid Pipe

Bedding material for rigid pipe shall be free from wood waste, organic material and other extraneous or objectionable materials. Bedding material shall conform to the following gradations when tested in accordance with ASTM D422. Maximum particle size for ductile iron pipe shall be 1-1/2 inches.

1. Base Material

Select: Selected excavated material for pipe base shall not contain particles larger than 5/8 inches.

Import: Imported base material shall be clean granular sand, or sand and gravel mix conforming to the following gradation:

Passing 3/4 inch square opening	100%
Passing 3/8 inch square opening	95% - 100%
Passing U.S. #8 sieve	0% - 10%
Passing U.S. #200 sieve	0% - 3%
Sand equivalent	35 min.

2. Pipe Zone

Pipe zone material shall be crushed, partially crushed or naturally occurring granular material conforming to the following gradation:

Passing 3/4 inch square opening	100%
Passing 3/8 inch square opening	95% - 100%
Passing U.S. #8 sieve	0% - 10%
Passing U.S. #200 sieve	0% - 3%
Sand equivalent	35 min.

B. Thermoplastic Pipe

Bedding material for thermoplastic pipe shall be free from wood waste, organic material and other extraneous or objectionable materials. Bedding material shall conform to the following gradations when tested in accordance with ASTM D422.

Pipe zone material shall be crushed, partially crushed or naturally occurring granular material conforming to the following gradation:

Passing 3/4 inch square opening	100%
Passing 3/8 inch square opening	95% - 100%
Passing U.S. #8 sieve	0% - 10%
Passing U.S. #200 sieve	0% - 3%
Sand equivalent	35 min.

9.03.19 Bank Run Gravel for Trench Backfill

All backfill material shall be free from wood waste, organic material and other extraneous objectionable materials. Material shall be uniformly graded from course to fine and conform to the following gradation when tested in accordance with ASTM D422:

1. Select

   Maximum particle size for this material shall be 4½ inches.

2. Import

Passing 2 ½ inches square opening	100%
Passing 1 inch square opening	40% - 80%
Passing ¼ inch sieve	25% - 60%
Passing #40 sieve	8% - 30%
Passing #200 sieve	0% - 5%
Sand equivalent	50 min.

CITY OF EDMONDS

MATERIAL MODIFICATIONS
DIVISIONS 7, 8 AND 9

The following material specifications shall clarify, supplement and supersede where applicable the standard specifications.

MATERIALS

A. City of Edmonds approved materials:
*** approved only when shown in the plan, proposal, or special provisions.**

1. WATER SYSTEMS (test pressure 200 psi with corps installed, 300 psi without for 8" and smaller; 200 psi for 10" and larger)

MATERIAL	DESCRIPTION	MANUFACTURER
Pipe	Class 52 ductile iron (AWWA C151) (or class as noted on plans)	
Fittings	Class 250 cement mortar lined cast iron or ductile iron (AWWA C 153)	
Nuts, bolts	Ductile iron or alloy steel A 303, grade B	
Mechanical couplings	Cast iron type for cast iron or ductile iron pipe, steel type for steel pipe	Rockwell Dresser Romac
Restrained joints	Flanged locking type pipe field lock gaskets uni-flange kwik-flange retainer gland couplings with anchor pins	US pipe, Clow US pipe US pipe Uni-Flange Standard Int Clow F 1058 Romac, Rockwell Dresser
Joint lubricant	U. S. Pharmacopoeia No. P39	
*Gate valves (10” and smaller, AWWA C500)	Clow Manhole No. 67 Kennedy Mueller	Clow Corporation Dresser Kennedy Valve Mueller Co.
Gate valves, resilient wedge (10” & smaller, AWWA C 509)	Clow Metroseal 250 Series 500 Mueller	Clow Corporation U. S. Pipe AFC American Flow Control Mueller Co.
Butterfly valves (10” & greater, AWWA C 504)	Groundhog Adap-Torq Lineseal III	Pratt Kennedy Mueller Co.
Tapping valve	CI with MJ joints and tapping valve	Mueller, Clow
Valve boxes	Seattle Style 940	
Fire hydrants (all bronze fitted, 1-1/4” operating nut, AWWA C 502, international yellow paint), 4" Storz Adapter (with two 2-1/2” hose nozzles and one 4-1/2” NST pumper nozzle)	Centurion Guardian, K-81-A Reliant 929 Medallion B-62-B Pacer (WB-67-250)	Mueller Co. Kennedy Valve Dresser Clow American Darling Waterous
Combination air relief/vaccum relief valve (ARV)	Series 140c Model 202c Model Ul-20	APCO Val-Matic Crispin

Water Services and Connections

MATERIAL	DESCRIPTION	MANUFACTURER
Copper pipe (std service)	Soft, type K, ASTM B 88	
Polyethylene pipe (1-1/2" & larger services)	Driscopipe 5100, high molecular, high density tubing IPOD	Phillips
Service clamps (1-1/2" & larger, IP thread)	Model 313 Model 202S Model FS202 Model H-16113	Rockwell Romac Ford Mueller Co.
Ball Corp. stops direct tap with copper service (cc threads)	F600 H-15000, H-15008 4701-Q	Ford Mueller Co. A.Y. McDonald
*Corp. stops direct tap with polyethylene service (cc threads)	H-15005 47013-T	Mueller Co. A.Y. McDonald
Corp. stops with saddle clamps (1½" & larger)	FB 500 H-9968 4701-Q	Ford Mueller Co. A.Y. McDonald
Curb stops	B11 series Orisel II, H-10283 6101	Ford Mueller Co. A.Y. McDonald
Fittings - copper to copper	H-15400, H-15403 C22 series 4758-Q	Mueller Ford A.Y. McDonald
Polyethylene connections (1½ " & larger)	Compression with stainless steel insert Pack joint with stainless steel insert 4758-3T	Mueller Co. Ford A.Y. McDonald
Meter boxes: • ¾" – 1" • 1½" – 2"	 MS 11x18x12 with MS 11x18 ductile lid & reader MS 17x30x12 with MS 17x30 ductile lid w/reader	Mid-States
Tracer wire for 1" & greater polyethylene services	14 gauge, PVC coated copper wire	

2. **SEWER SYSTEM** (sewer pipe)

MATERIAL	DESCRIPTION	MANUFACTURER
Pipe	Concrete class 2 (non-reinforced) ASTM C14 or AASHTO M 86 *Concrete (reinforced) ASTM C76 or AASHTO M 170 PVC, SDR 35, ASTM D3034	
Fittings and sewer service	Same material as pipe PVC sand collars	
Manholes	Precast ASTM C478, 48" min. at bottom, top concentric to 24" opening Flat slab, 8" min. thickness, 24" opening, steps 3/4" galvanized deformed bar	
Manhole steps	Polypropylene, ASTM D-4101 material over ASTM A-615, grade 60 steel reinforcing bar, step to comply with ASTM C-478	Lane, MA Industries
Frames and covers	ASTM A48, class 40, cast iron, bituminous coated, "sewer" embossed in top	East Jordan Ironworks Model: 00370084
Transition couplings	Longitudinally bolted coupling with gasketed joints	Romac, Dresser, Rockwell

3. STORM DRAIN SYSTEM

MATERIAL	DESCRIPTION	MANUFACTURER
Pipe	*Concrete, reinforced, ASTM C76 or AASHTO M 170 Concrete (non-reinforced) ASTM C14 or AASHTO M86, class 2 *PVC, SDR 35, ASTM D3034	
	Aluminum CMP, AASHTO M196, 16 ga. or as shown on plans, gasketed and coupling banded	
	*Aluminum smooth wall pipe, l6 ga. or as shown on plans, recorrugated ends with annular bands and gaskets	Cascade Culvert, Kaiser Aluminum
	*PVC, SDR 35, ASTM D3034	
	Ductile iron, class 50	
	Perma-loc series 46 by J.M. Manufacturing Co.	
	HDPE; smooth interior pipe, watertight AASHTO M252, M294 Type S ASTM D 2321 ASTM D 1248 Type III Category 4 Grade P33 Class C ASTM D 3350 (2' Minimum cover under pavement areas)	ADS Hancor
Fitting	Same as pipe material PVC sand collars	
Manholes	Precast ASTM C478, 48" min. at bottom, top concentric to 24" opening Flat slab, 8" min. thickness, 24" opening, steps 3/4" galvanized deformed bar	
Manhole steps	Polypropylene, ASTM D-4101 material over ASTM A-615, grade 60 steel reinforcing bar, step to comply with ASTM C-478	Lane, MA Industries
Frames and covers	ASTM A48, class 40, cast iron, bituminous coated, "drain" embossed in top	East Jordan Ironworks Model: 00370082
Transition couplings	Longitudinally bolted coupling with gasketed joints	Romac, Dresser, Rockwell

SUBSTITUTIONS

B.

MATERIAL	DESCRIPTION	MANUFACTURER
	Provide submittals for substitute materials to the Engineer for approval in accordance with the Standard Specifications	

city of edmonds
development information

Inc. 1890

WATER SERVICE LINE SPECIFICATIONS

I. DEFINITION: **The Water service line is defined as that pipe installed from the water meter to the building.**

II. MATERIALS Per Section 604.0, Chapter 6 of the IAPMO/ANSI UPC 1-2003 Uniform Plumbing Code and WAC amendment #, the following types of water service line materials are recognized and shall meet the ASTM requirements as outlined in Table 14-1of the above Code:

1. Copper piping no less than type "L".
2. Polyethylene piping with iron pipe O.D. size and ASTM-D2239-SIDR#7-PE3406 markings.
3. Plastic, PVC, CPVC, PEX
4. Galvanized malleable iron., galvanized wrought iron, galvanized steel
5. Asbestos cement, PE, PVC, PEX-AL-PEX or PEX-AL-PE water pipe manufactured to recognized standards for water supply outside the building supply distribution can also be used.
6. All materials used in the water supply system, except valves and similar devices, shall be of like material, except where otherwise approved by the City.
7. Per City policy, minimum pipe size from meter to house is 1".

III. MARKINGS Piping shall be marked on the material at intervals of not more than 5' for: poly, pvc, and pex, cpvc, plastic pipe, etc. with manufacturer's name, size and pressure rating. The pressure rating shall be a minimum of 160 P.S.I.

IV INSTALLATION

1. The water service pipe line shall be bedded on a firm, undisturbed base that is smoothly graded and free of large materials. If materials for backfill are larger than ½" diameter rock, a proper sandy soil shall be on site to backfill to 2 inches above the water pipe at time of inspection. If soil is disturbed, it shall be compacted to provide a stable base.

2. The pipe depth shall be a minimum of 18 inches from finished grade to top of service pipe and an 18 inch depth at the meter box.

3. When polyethylene pipe or other non traceable pipe is used, it must be buried with 12-gauge solid core tracer wire with vinyl coating. The run must be continuous, grounded at the meter and house and taped every 10 feet to the water pipe.

4. Polyethylene Pipe connections at the meter must be made with brass compression fittings. In addition, brass fittings shall be used to connect sections of pipe together. All connections shall be double-clamped with stainless steel clamps and shall be secured in opposite directions

5. **Proper pipe connection fittings to the water meter, for all other material shall be approved by the City prior to connection**

5. Piping shall be flushed out and under pressure with no leaks at the time of inspection.

6. The water service line shall not be buried with the sanitary sewer or drainage pipe.
   a) Minimum horizontal separation between sewer and water shall be 10 feet.
   b) Minimum vertical separation between sewer and water shall be 18 inches.

When the minimum 10 foot separation is not possible, due to lack of space, the waterline shall be placed on a solid shelf excavated at one side of the common trench line 18" above the top of the sewerline and at least 18" from edge of waterline to edge of sewer line (see figure 1 below). If the waterline must cross the sewer, it must be at least 18" above the top of the sewer pipe at all points.

V. INSPECTIONS

Water service line and all connections shall be inspected prior the backfill and the preceding criteria must be met, or inspection will not be performed. Call the Engineering Inspection line at 425-771-0220, Ext. 1326, 24 hours in advance to schedule the required inspection. You may state your preference for morning or afternoon. Approved permit and/or job card must be on site at time of inspection.

#E86

WATER SERVICE WITH LESS THAN 10 FOOT SEPARATION

Horizontal Separation Notes
(For Parallel Construction)

The parallel separation detail on figure 1 refers to side sewers only. Side sewers (gravity or pressure) shall be installed lower than the water service with a minimum vertical clearance of 18" from the bottom of the water service line to the top of the side sewer line.

Vertical Separation Notes
(For Perpendicular Construction)

Side sewer lines that must cross water service lines shall be laid below the water lines to provide a separation of at least 18" between the invert of the water pipe and the crown of the sewer, whenever possible. When local conditions prevent this vertical separation, the following construction shall be used:

A. Side sewers, passing over or under water lines, shall be:

   1. Constructed of water main standard pipe material as shown in the Table. One segment of the maximum standard length of pipe, (but no less than 18' long) shall be used with the pipes centered to maximize joint separation.

   OR

   2. Standard gravity sewer material encased in 1 sack mix control density fill (CDF) or in a ¼" thick continuous steel casing with all voids pressure-grouted with sand-cement grout. The length of sewer pipe shall be centered at the point of crossing so the joints will be equidistant and as far as possible from the water line. The sewer pipe shall be the longest standard length available from the manufacturer.

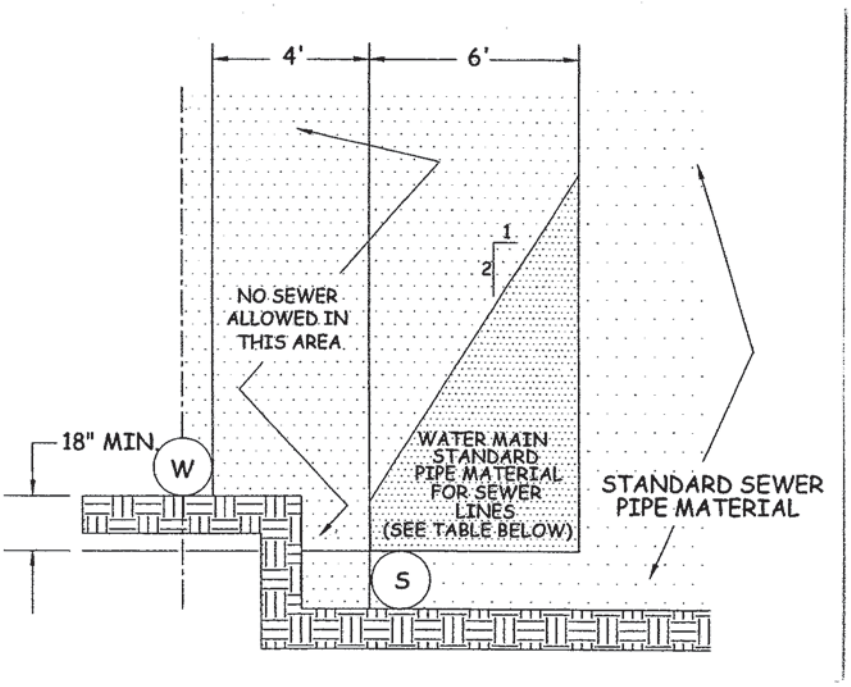

FIGURE 1

WATER SERVICE PARALLEL TO GRAVITY SEWER WITH LESS THAN 10 FOOT SEPARATION

WATER MAIN STANDARD PIPE MATERIAL FOR SEWER LINES			
TYPE OF PIPE	AWWA (ASTM) STANDARD		
	PIPE	JOINT	FITTINGS
Ductile Iron	C 151 & C 104	C 111	C 110
Polyvinyl-Chloride	C 900	(D3139 & F 477)	C 110
Concrete Cylinder	C 303		

B. Water lines passing under gravity sewer, in addition, shall be protected by providing:

   1. A vertical separation of at least 18 inches between the invert of the sewer and the crown of the water line.
   2. Adequate structural support for the sewers to prevent excessive deflection of joints and settling on and breaking of the water line.

C. Pressure sewers shall only be constructed under water lines with ductile iron pipe or standard sewer pipe in a steel casing for a distance of at least ten feet on each side of the crossing.

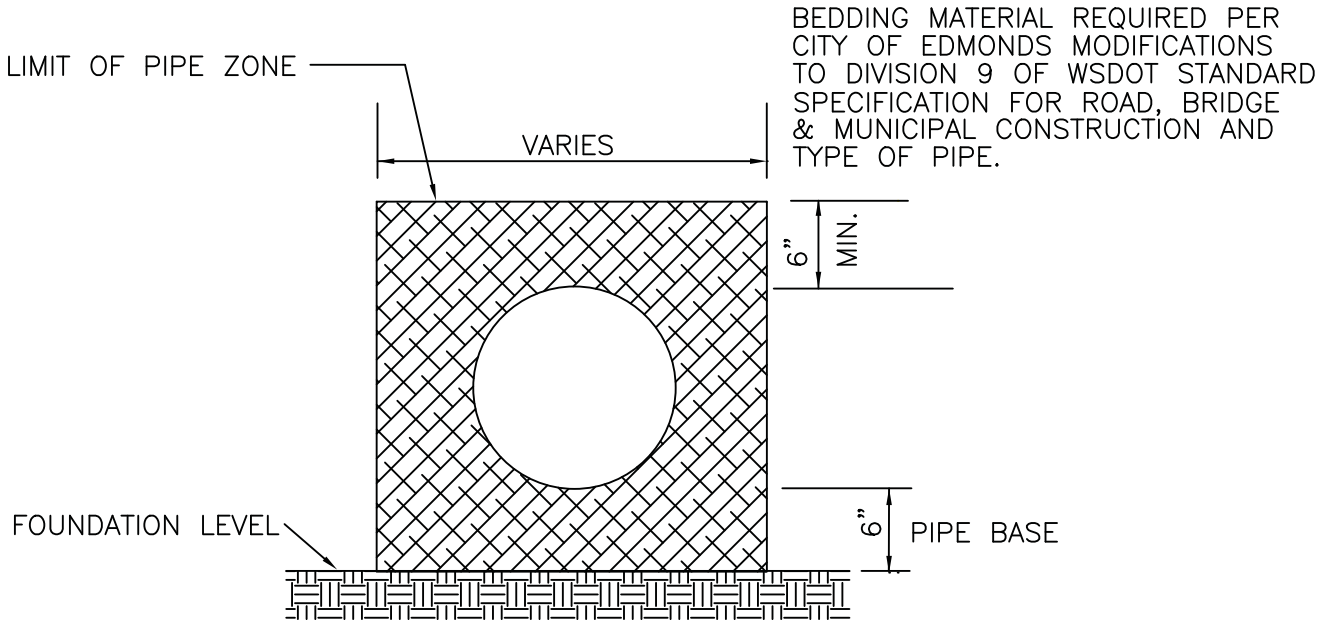

N O T E S :

1. PROVIDE UNIFORM SUPPORT UNDER BARREL
2. HAND TAMP UNDER HAUNCHES
3. COMPACT BEDDING MATERIAL TO 95% MAX. DENSITY

1890–1990

CITY OF EDMONDS

REVISIONS		STANDARD DETAIL		
APPROVED BY	DATE			
D. GEBERT	4/2/07	PIPE BEDDING		
		DATE 7/24/01	SCALE NTS	DWG NO. E4.1

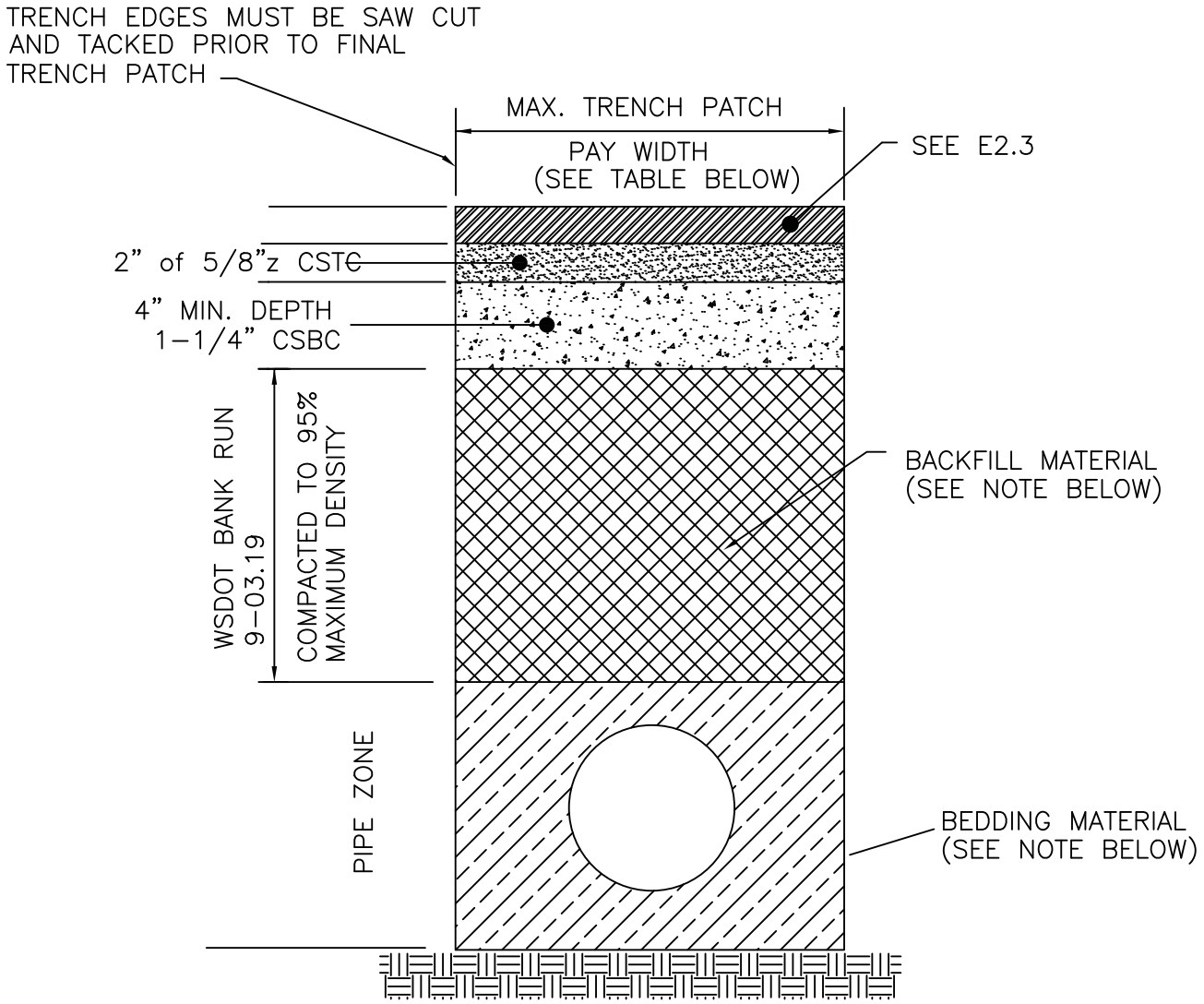

N O T E:

REFER TO CITY OF EDMONDS MODIFICATIONS TO DIVISION 9 OF WSDOT SPECIFICATIONS FOR ROAD, BRIDGE & MUNICIPAL CONSTRUCTION

TABLE 1: MAX. TRENCH PATCH PAY WIDTH

TRENCH DEPTH	PAY WIDTH
1'-4'	40"
4'-10'	60"
10'-20'	72"

1890-1990

CITY OF EDMONDS

REVISIONS	
APPROVED BY	DATE
D. GEBERT	10/6/03
D. GEBERT	07/28/05
D. GEBERT	04/02/07

STANDARD DETAIL

TYPICAL TRENCH SECTION

DATE	SCALE	DWG NO.
7/24/01	NTS	E4.2

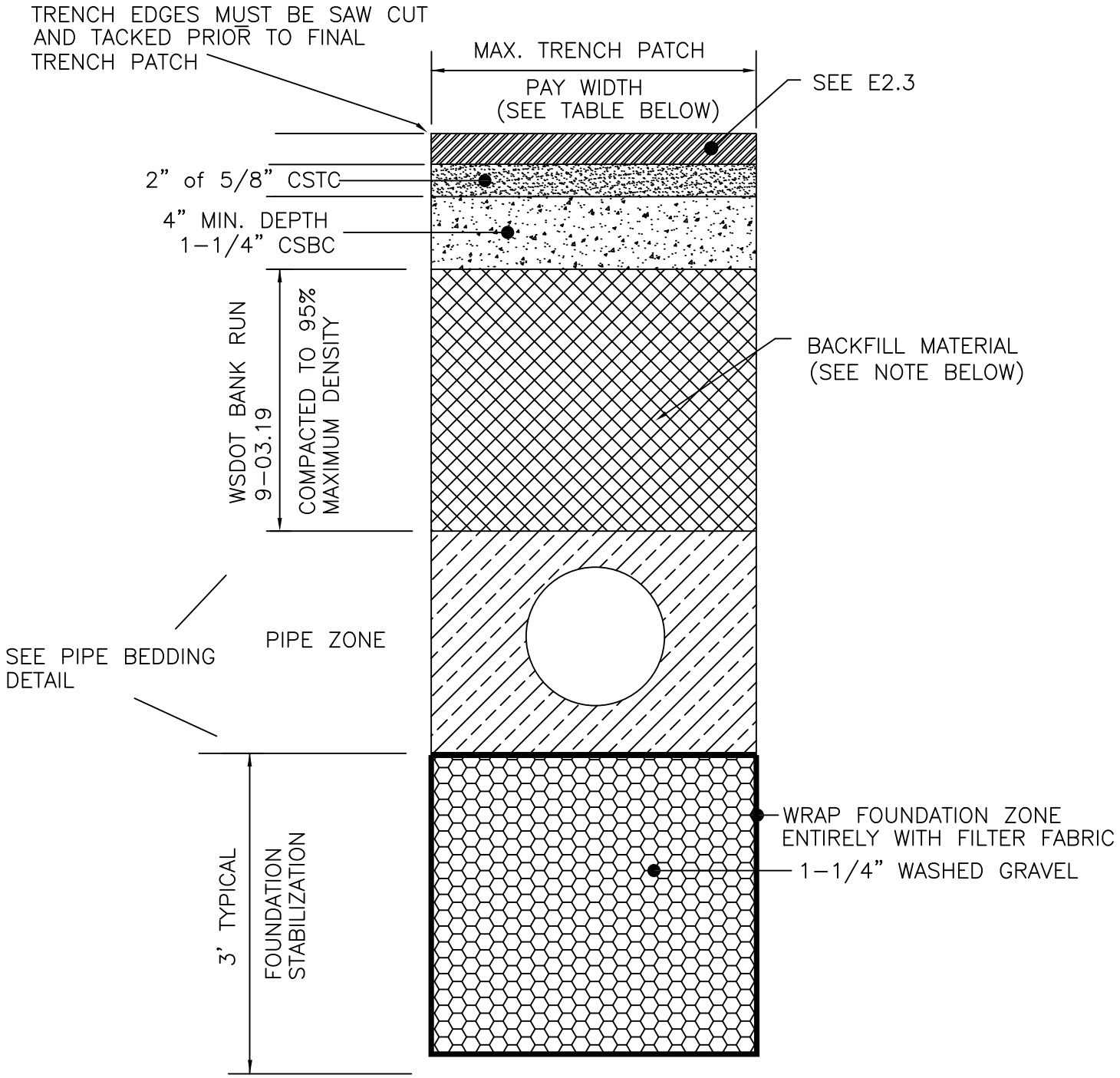

TABLE 1: MAX. TRENCH PATCH PAY WIDTH

TRENCH DEPTH	PAY WIDTH
1'-4'	40"
4'-10'	60"
10'-20'	72"

N O T E:

REFER TO CITY OF EDMONDS MODIFICATION TO DIVISION 9 WSDOT STANDARD SPECIFICATIONS FOR ROAD, BRIDGE & MUNICIPAL CONSTRUCTION.

1890-1990

CITY OF EDMONDS

REVISIONS	
APPROVED BY	DATE
D. GEBERT	10/6/03
D. GEBERT	07/28/05

STANDARD DETAIL

TYPICAL TRENCH SECTION _ FOUNDATION STABILIZATION

DATE	SCALE	DWG NO.
7/24/01	NTS	E4.3

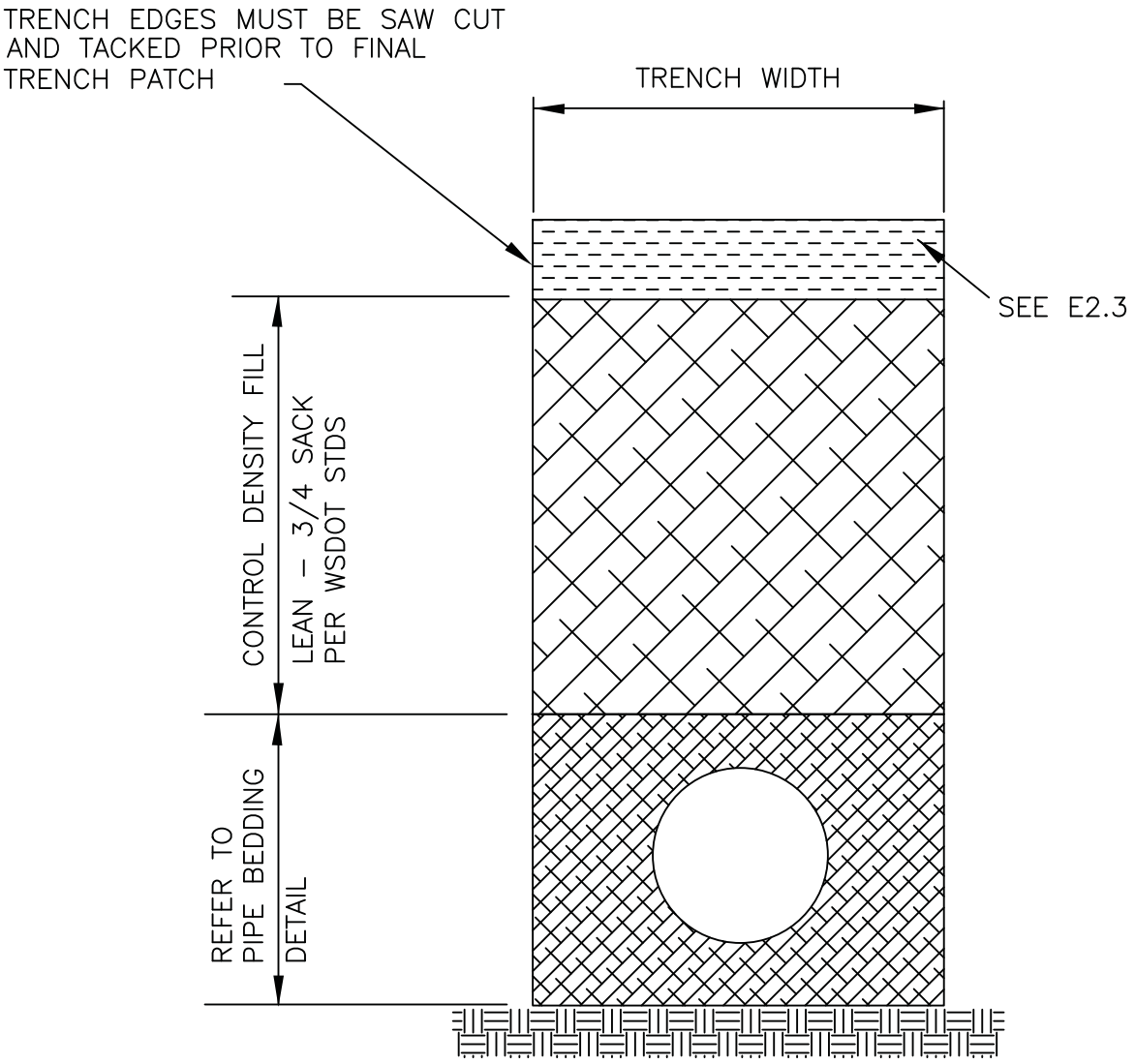

CITY OF EDMONDS

1890–1990

REVISIONS	
APPROVED BY	DATE
D. GEBERT	07/28/05
D. GEBERT	04/02/07

STANDARD DETAIL

TYPICAL TRENCH SECTION- CONTROL DENSITY FIL

DATE	SCALE	DWG NO.
7/24/01	NTS	E4.4

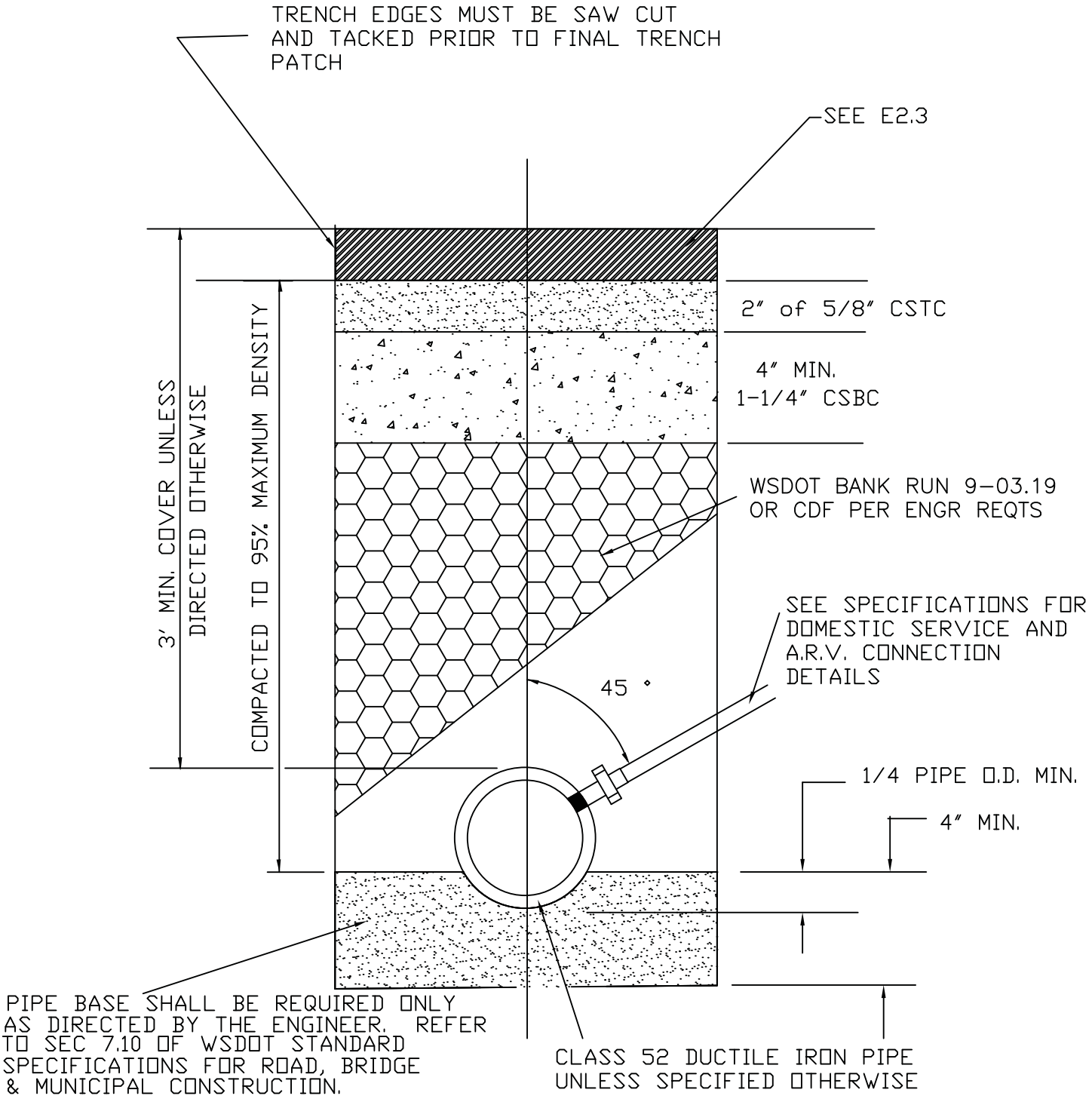

CITY OF EDMONDS

Est. 1890

REVISIONS	
APPROVED BY	DATE
D. GEBERT	10/6/03
D. GEBERT	07/28/05
D. GEBERT	04/02/07

STANDARD DETAIL

TYPICAL WATER LINE TRENCH SECTIO

DATE	SCALE	DWG NO.
7/24/01	NTS	E4.5

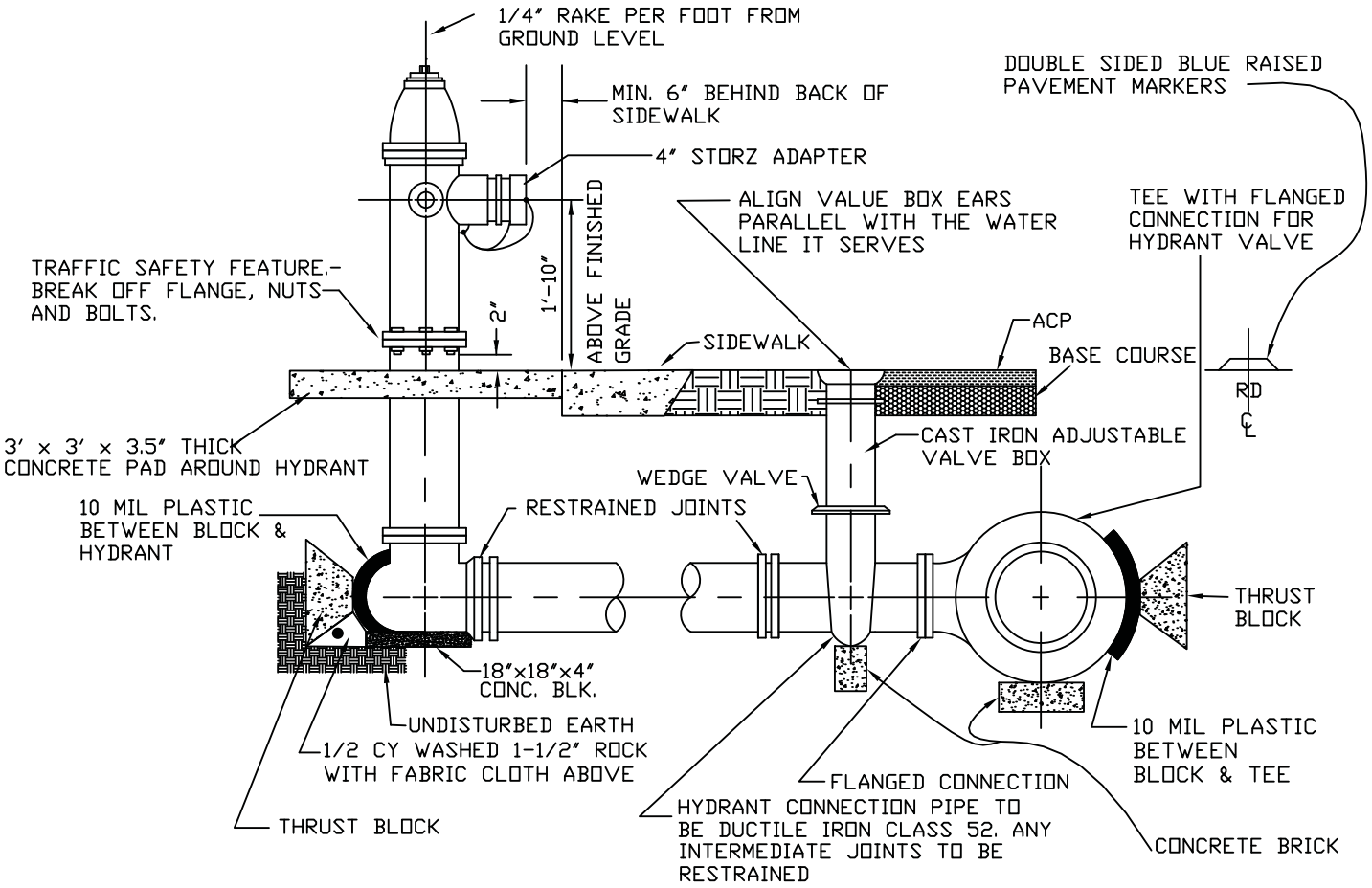

N O T E S :

1. HYDRANTS AND ALL MATERIALS TO BE IN ACCORDANCE WITH CITY OF EDMONDS APPROVED MATERIAL LISTINGS.
2. HYDRANTS SET IN CONCRETE REQUIRES AN EXPANSION STRIP AROUND HYDRANT BARREL. IN ADDITION, THE INSTALLATION OF THE HYDRANT ON PRIVATE PROPERTY SHALL EQUAL OR EXCEED STANDARDS SET FORTH FOR THE INSTALLATION OF PUBLIC FIRE HYDRANTS IN THE CITY OF EDMONDS.
3. PROVIDE FOR VEHICULAR TRAFFIC PROTECTION.
4. ALL HYDRANTS SHALL BE PROVIDED WITH (2) 2-1/2" HOSE NOZZLES AND (1) 4-1/2" NST PUMPER NOZZLE WITH 4" STORZ QUICK COUPLING ADAPTER.
5. STEAMER PORT SHALL FACE THE STREET OR ROADWAY FOR FIRE ENGINE ACCESS.
6. THREE FOOT MINIMUM CLEARANCE SHALL BE MAINTAINED AROUND HYDRANT WHEN PLACING LANDSCAPING OR ROCKERIES (ETC).
7. FIRE HYDRANTS SHALL BE PAINTED SAFETY YELLOW
8. CONSTRUCT 3' X 3' X 3.5" THICK CONCRETE PAD AROUND HYDRANT PIPE.

1890–1990

CITY OF EDMONDS

REVISIONS	
APPROVED BY	DATE
D. GEBERT	6/16/03
D. GEBERT	4/2/07

STANDARD DETAIL

FIRE HYDRANT ASSEMBLY

DATE	SCALE	DWG NO.
7/24/01	NTS	E7.1

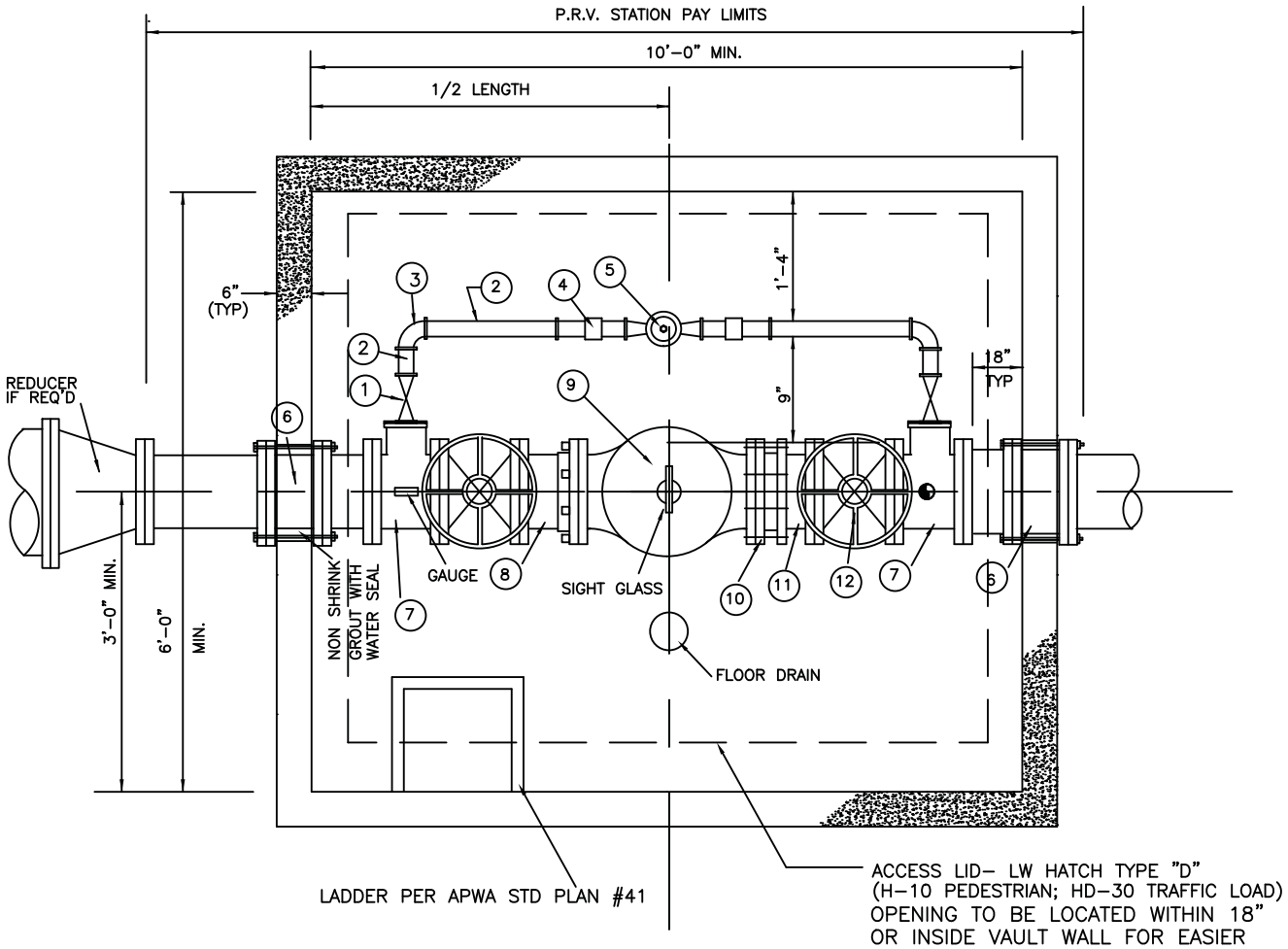

1. 2" BRASS BALL VALVE
2. 2" THREADED BRASS PIPE
3. 2" BRASS 90° BEND
4. 3 PIECE UNION
5. 2" THREADED PRV WITH; VALVE STEM INDICATOR, TEST COCKS, AND EPOXY LINING.
6. DI SPOOL WITH COLLAR(PE X FL) LENGTH TO FIT WITH SHACKLE BOLTS
7. DI FL TEE WITH 2" TAPPED FLANGE
8. FL X FL STRAINER EQUAL TO MUESSCO #751
9. FL X FL PRV WITH: VALVE STEM INDICATOR, TEST COCKS, EPOXY LINING.
10. FLANGE COUPLING ADAPTER
11. FL X PE SPOOL. LENGTH TO FIT LINING.
12. FL X FL RSGV WITH HAND WHEEL

LADDER TO EXTEND TO ACCESS LID

N O T E:

1. VALVES, REDUCER, FLANGED TEE WITH THREADED REDUCER PLATE SHALL DEPEND ON THE SIZE OF PIPE INSIDE THE VAULT.
2. INSIDE VAULT HEIGHT: 7' MIN.
3. ACCESS LID BY L.W. HATCH; TYPE "D" (H-10 PEDESTRIAN LOAD; HD-30 TRAFFIC LOAD) VAULT COVER GUTTER DRAIN TO BE CONNECTED TO SUMP OR STORM LINE.

1890-1990

CITY OF EDMONDS

REVISIONS		STANDARD DETAIL		
APPROVED BY	DATE	PRV (PLAN VIEW)		
D. GEBERT	4/2/07			
		DATE 7/24/01	SCALE NTS	DWG NO. E7.2

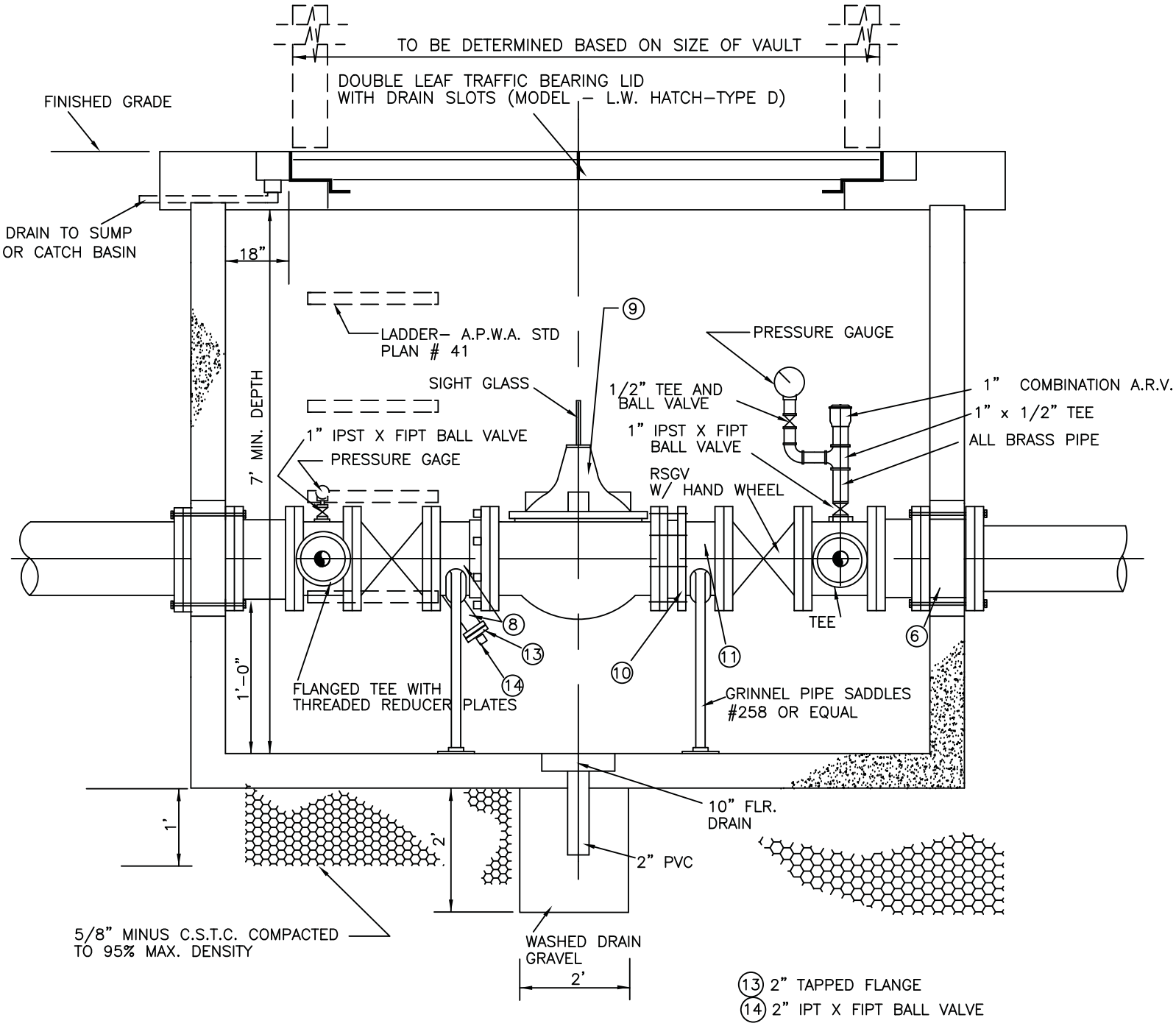

1890–1990

CITY OF EDMONDS

STANDARD DETAIL

PRV (PROFILE VIEW)

REVISIONS		
	APPROVED BY	DATE
	D. GEBERT	4/2/07

DATE	SCALE	DWG NO.
7/24/01	NTS	E7.2.1

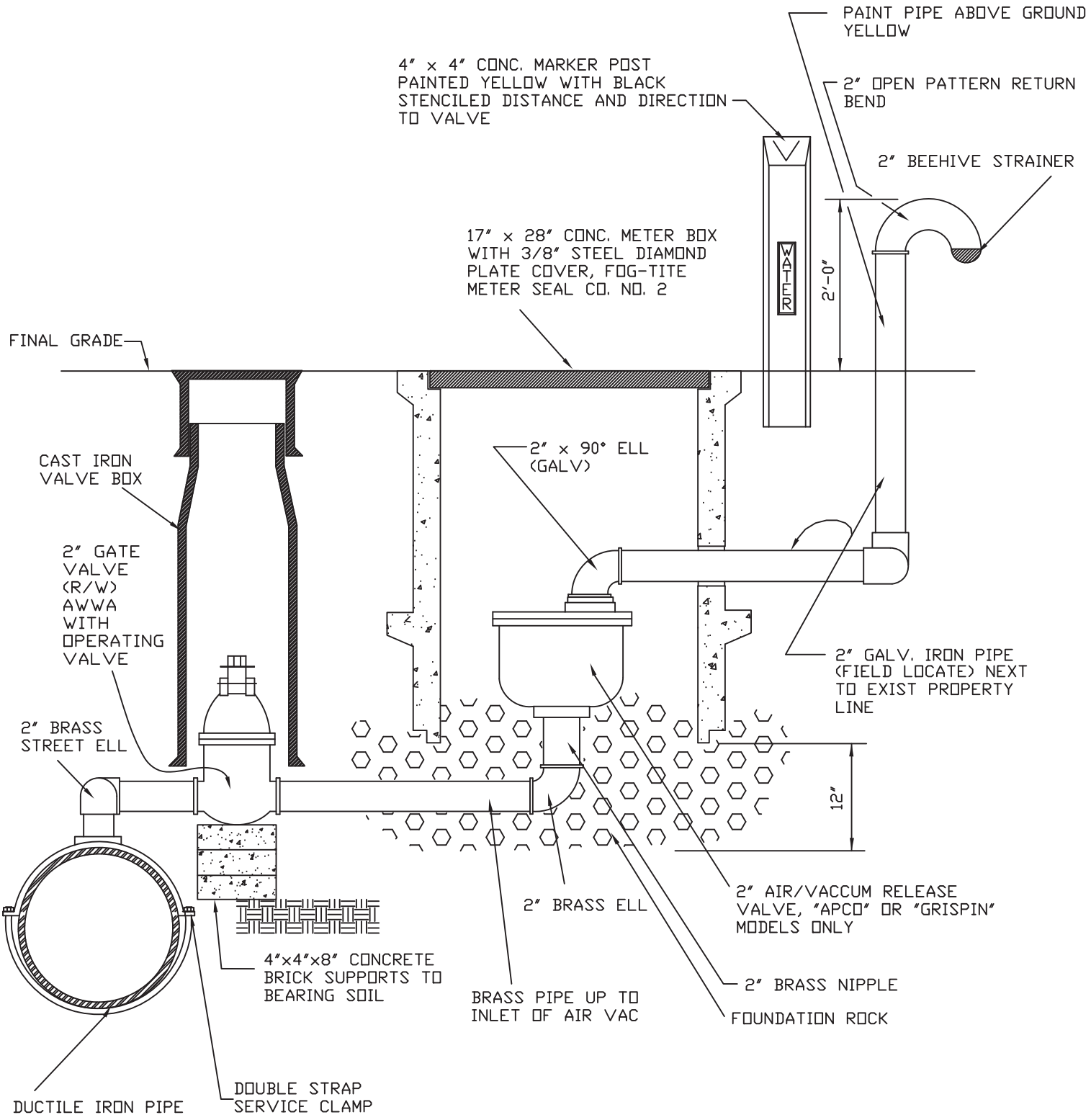

1890–1990

CITY OF EDMONDS

REVISIONS		STANDARD DETAIL		
APPROVED BY	DATE			
D. GEBERT	5/26/06	**ARV ASSEMBLY (TYPE 1)**		
		DATE 7/24/01	SCALE NTS	DWG NO. E7.3

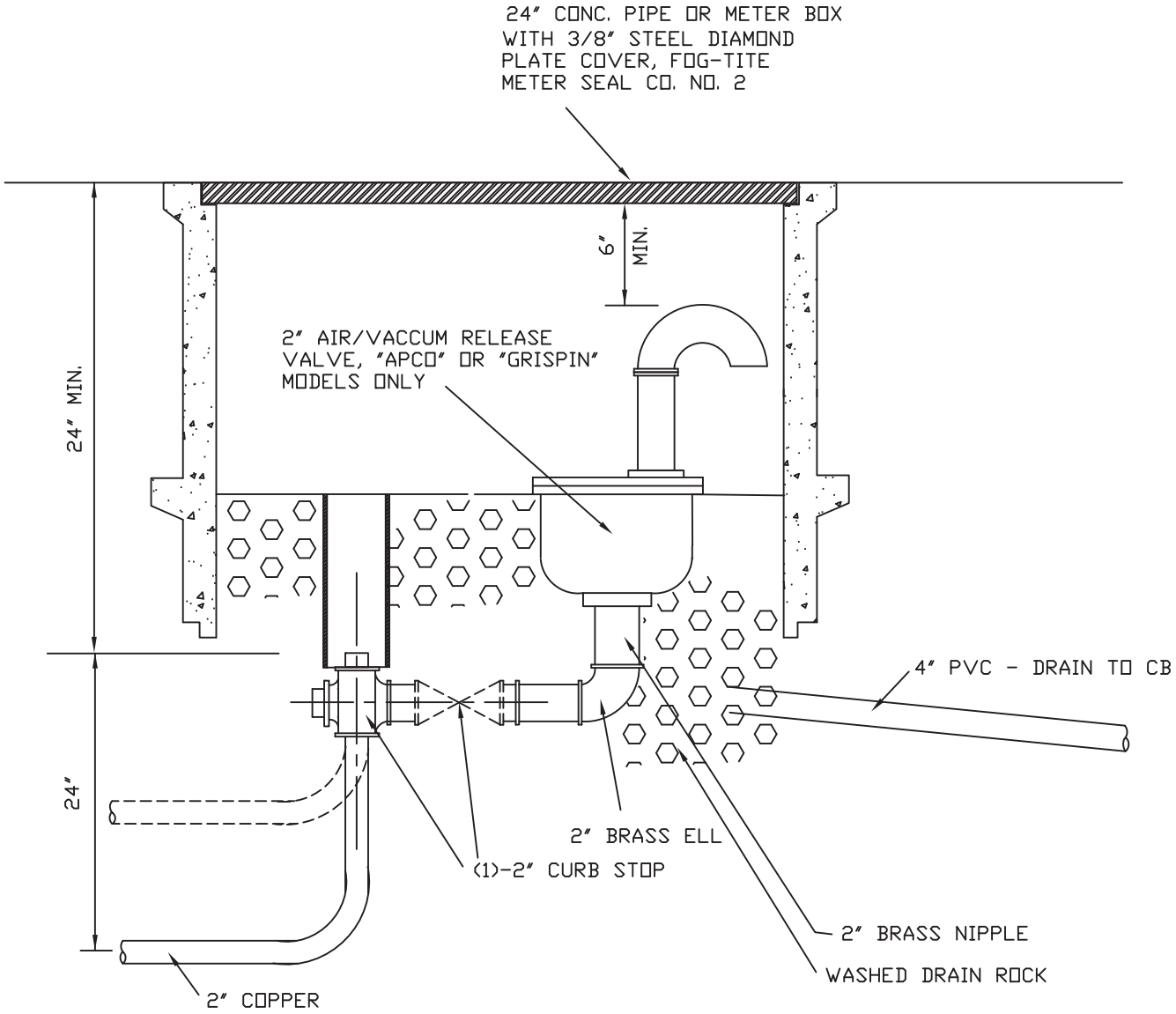

(1) H14258 ANGLE METER WITH COMPRESSION
INLET OR STD CURB STOP

N O T E:

IF THE ARV ASEMBLY IS LOCATED WHERE GROUND WATER WILL INTERFERE WITH THE AIR DISCHARGE PIPE, A STAND PIPE MUST BE INSTALLED ABOVE GROUND WITH A STRAINER OR A PIPE INSTALLED FROM THE METER BOX TO A CATCH BASIN.

1890–1990

CITY OF EDMONDS

REVISIONS		STANDARD DETAIL		
APPROVED BY	DATE			
D. GEBERT	10/6/03	**ARV ASSEMBLY (TYPE 2)**		
		DATE 7/24/01	SCALE NTS	DWG NO. E7.4

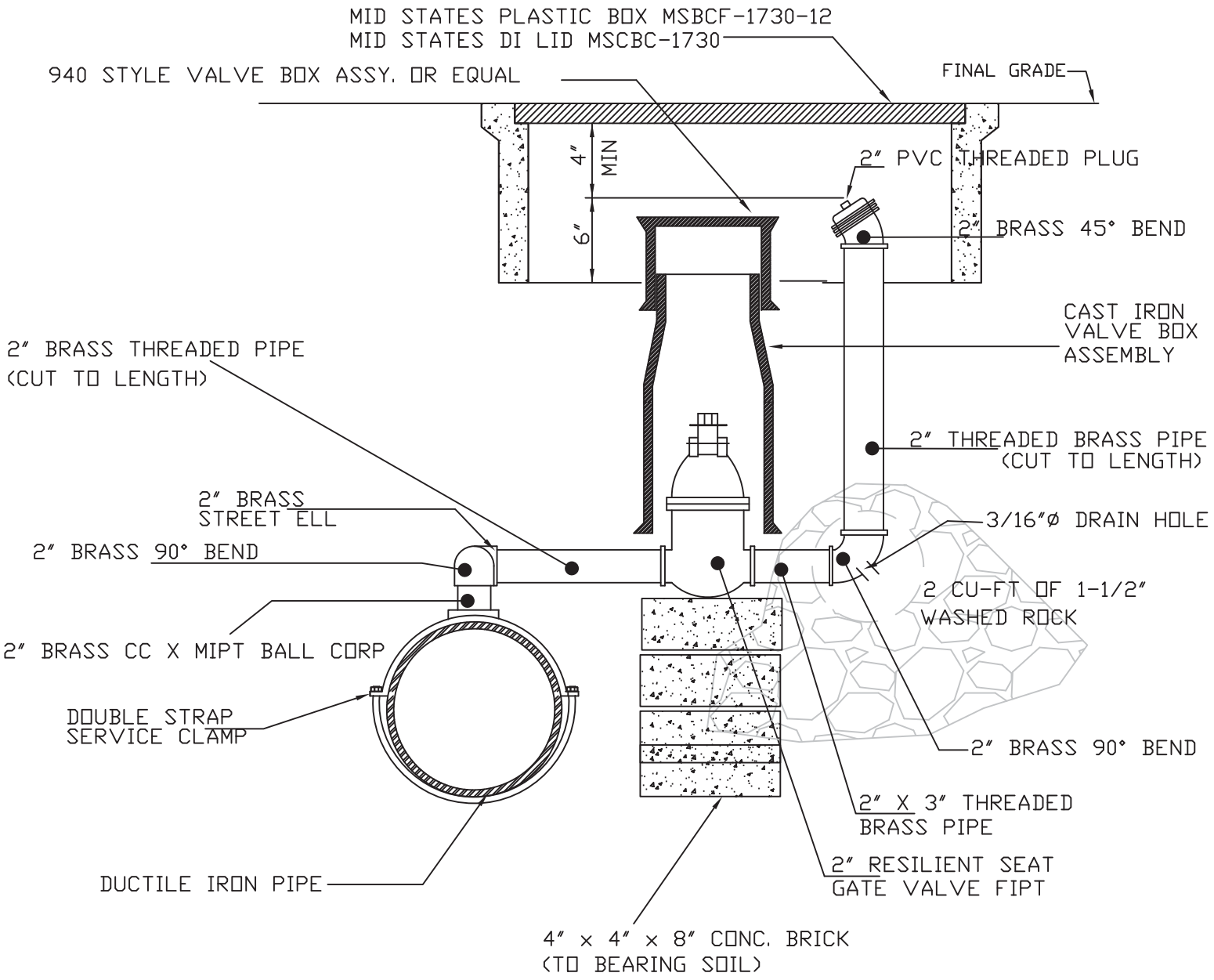

NOTE: PLACE BLOW-OFF ASSY. WITHIN 3' OF END OF MAIN.

1890–1990

CITY OF EDMONDS

REVISIONS		STANDARD DETAIL		
APPROVED BY	DATE	**BLOW-OFF ASSEMBLY**		
D. GEBERT	10/13/03			
		DATE 07/24/01	SCALE NTS	DWG NO. E 7.5

(M) INSTALL CHECK VALVE ON METER INSTALLATIONS FOR NEW BUILDING CONSTRUCTION ONLY. DELETE CHECK VALVE FOR METERS INSTALLED WITH REPLACEMENT OF EXISTING WATER MAINS.

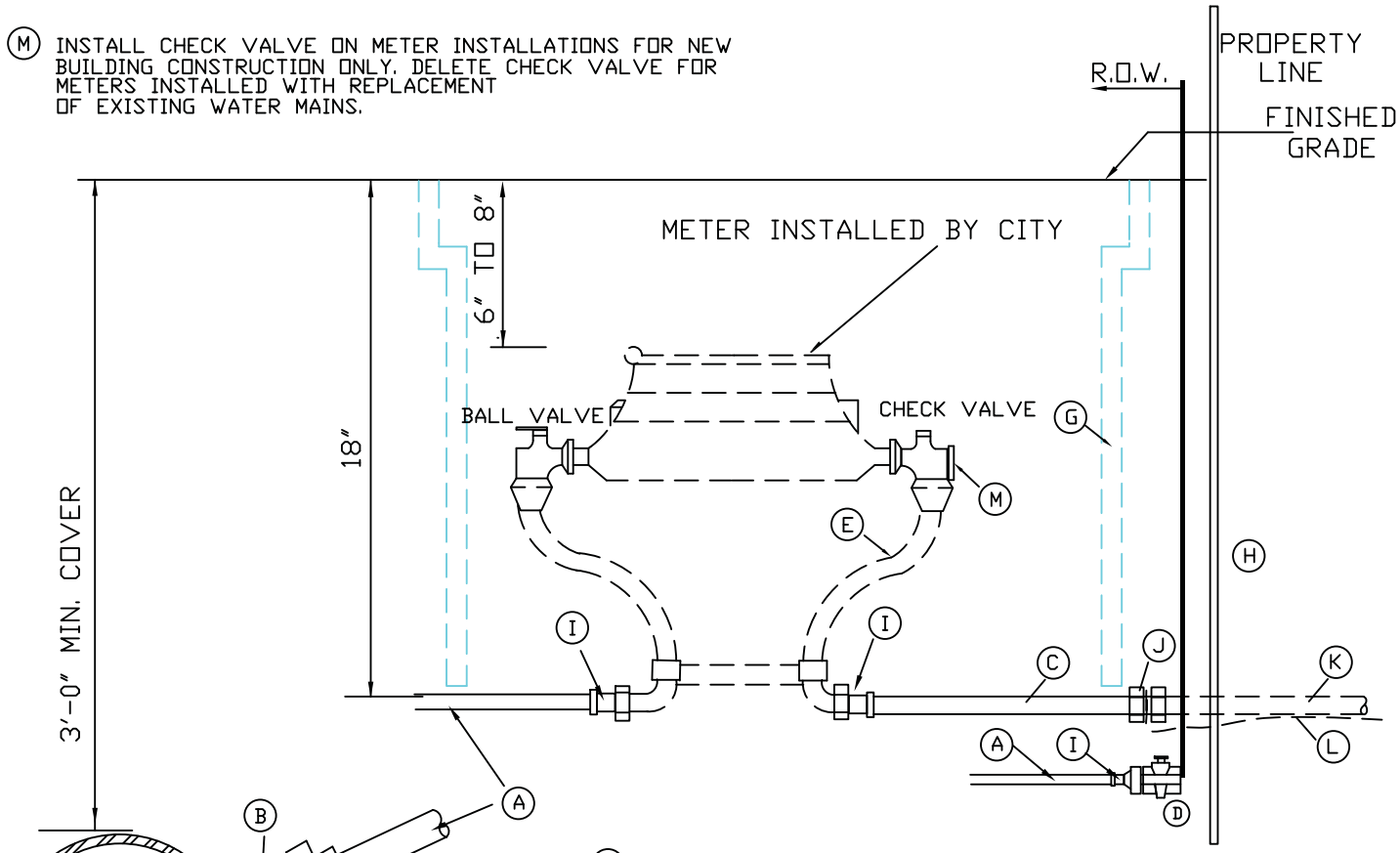

(D) FOR VACANT LOT (FUTURE USE) CURB STOP SHALL BE PLACED AT PROPERTY LINE AND LOCATION MARKED WITH PAINTED 2" X 4" WITH "WATER" STENCILED ON IT. SHALL BE INSTALLED IF EXISTING YOKE HAS NO CURB STOP. DEPTH SHALL BE 18".

CEMENT LINED D.I. WATERMAIN WITH TYTON TYPE JOINT

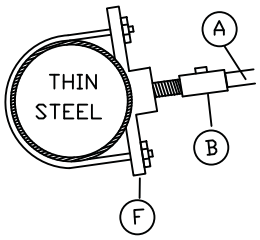

MATERIAL LIST

(A) ALL 3/4" OR 1" SERVICE TO BE TYPE "K" SOFT COPPER TUBING.

(B) BRONZE CORP. STOP WITH CC THREAD INLET AND COPPER (CTS) GRIP OUTLET. (FORD OR MUELLER)

(C) TYPE "K" SOFT COPPER TUBING OR HIGH MOLECULAR POLY PIPE (160 PSI). TRACER WIRE SHALL BE WRAPPED AND TAPED TO POLY PIPE.

(D) BRONZE CURB STOP WITH EIP THREAD.

(E) 3/4" METER SETTER EQUAL TO A.Y.M. McDONALD AY20212WCDD3 WITH ANGLE BALL VALVE WITH LOCK WINGS, CHECK VALVE, 12" TALL INLET AND OUTLET: HORIZONTAL WITH DUAL PURPOSE CONNECTIONS

(F) DOUBLE STRAP SADDLE REQUIRED WHEN TAPPING THIN STEEL

(G) MID-STATES PLASTIC METER BOX (MS 11 X 18 X 12) WITH MS 11x18 DUCTILE LID WITH 9"x6½" READER

(H) PAINTED 2 X 4" WITH "WATER" STENCILED ON IT

(I) MIPT X CTS GRIP

(J) BRASS COMPRESSION FITTING

(K) 1" WATER SERVICE TO HOUSE

(L) 14GA. WIRE TRACER (TAPED TO POLY PIPE EVERY 10')

NOTE: PVC PIPE SHALL NOT BE USED FOR WATER SERVICES

1890–1990

CITY OF EDMONDS

REVISIONS	
APPROVED BY	DATE
D. GEBERT	6/16/03
D. GEBERT	6/19/03
D. GEBERT	4/2/07

STANDARD DETAIL

3/4" and 1" WATER SERVICE INSTALLATION

DATE	SCALE	DWG NO.
7/24/01	NTS	E7.6

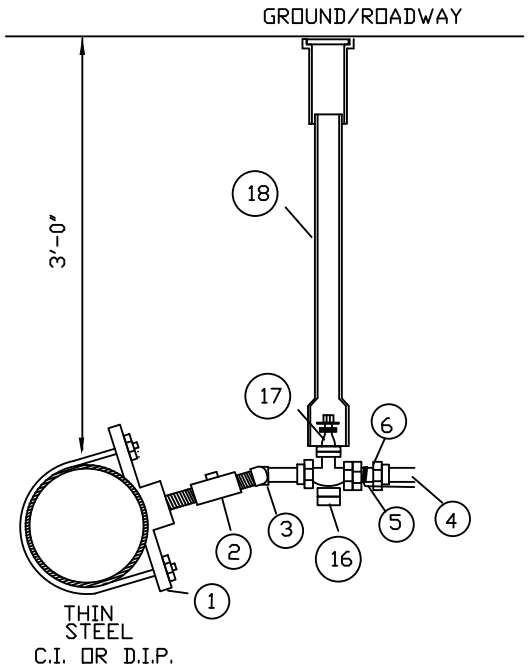

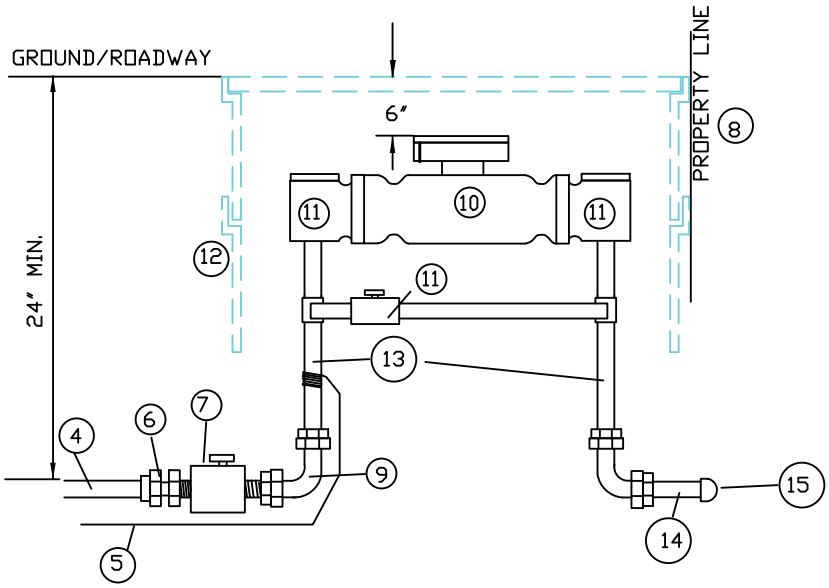

NOTE: SERVICE TAP TO MAIN SHALL BE ANGLED AND NOT EXCEED 22 DEGREES

1) 2" (IP THREAD) DOUBLE STRAP SADDLE EQUAL TO ROMAC STYLE 202 IS REQUIRED REGARDLESS OF PIPE MATERIAL
2) 2: BRASS CORP. CC X MIPT.
3) 2- 2" BRASS STREET ELLS FOR SWING JOINT
4) IPS POLY HI-MOL PIPE (160 PSI) OR COPPER TYPE K PIPE WITH MALE IRON PIPE SIZE. FOR POLY & IPS OR CTS PACK JOINT FILLING.
5) 12 GAUGE SOLID CORE WIRE (TRACE WIRE). STRIP PLASTIC AND WRAP AROUND BRASS AT BOTH ENDS.
6) 2" STAINLESS STEEL STIFFENER AND 2" MIPT X IPS PAC JOINT
7) BALL VALVE (IRON PIPE SIZE) CURB STOP.
8) BACK SIDE OF METER BOX SHALL BE SET AT THE PROPERTY LINE. NOTE: (METER BOXES SHALL NOT BE PLACED IN DRIVEWAY AREAS).
9) 2" BRASS 90° BEND
10) WATER METER- TO BE SUPPLIED BY THE CITY. CONTACT PUBLIC WORKS BEFORE INSTALLATION OF THE OUTLET HALF OF THE SETTER.
11) 2" METER SETTER WITH HIGH BYPASS PER A.Y. MCDONALD OR FORD (SEE PART CHART TO THE LEFT) VERT. IN, VERT, OUT. FLANGED BALL VALVE WITH LOCK WINGS.
12) STACK 2 METER BOXES: MID STATE PLASTIC METER BOXES (MS 17x30x12), WITH MS 17x12 DUCTILE LID WITH 9"x6½" READER. PLACE BACK OF BOX AT PROPERTY LINE.
13) BRASS NIPPLE
14) 2" THREADED BRASS NIPPLE (12" LONG)
15) SCHEDULE 40 2" PVC CAP. REMOVED WHEN CONNECTION MADE TO CUSTOMER LINE.
16) 4" X 4" X 8" CONCRETE BLOCK SUPPORTS.
17) 2" RESILIENT WEDGE GATE VALVE (F.I.P. X F.I.P.). ULFM APPROVED, FUSE BONDED EPOXY COATED BODY AND BONNET, WEDGE FULLY ENCAPSULATED WITH RUBBER AND WITH 2" AWWA OPERATING NUT. EQUAL TO CLOW F-6103.
18) 2-PIECE VALVE BOX. TOP SECTION TO BE RICH 940 STYLE 18" WITH REGULAR BASE SECTION. LENGTH TO FIT.

PART CHART

1½" MTR SETTER
A.Y. MCDONALD: M30-F608-WWFF-66
FORD: VBB86-95147-020

2" MTR SETTER
A.Y. MCDONALD: M30-F708-WWFF-77
FORD: VBB87-95147-019

NOTE: ALL FITTINGS SHALL BE BRASS. IF USING 1-1/2" METER, ALL PARTS SHALL BE 1-1/2" EXCEPT THE 2" WEDGE GATE VALVE WITH BRASS BUSHINGS.

1890–1990

CITY OF EDMONDS

REVISIONS	
APPROVED BY	DATE
D. GEBERT	6/16/03
D. GEBERT	10/6/03
D. GEBERT	4/2/07

STANDARD DETAIL

1-1/2"and 2" WATER SERVICE INSTALLATI

DATE	SCALE	DWG NO.
7/24/01	NTS	E7.6.1

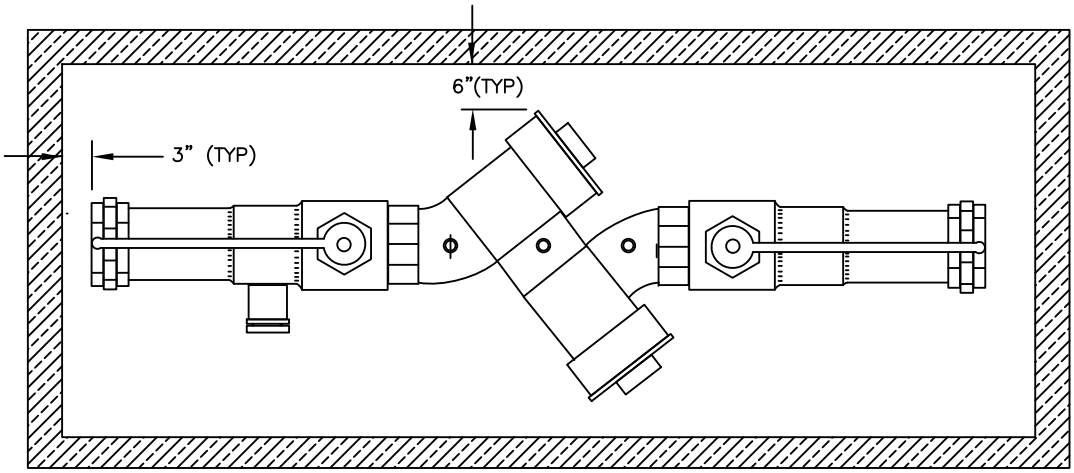

TOP VIEW

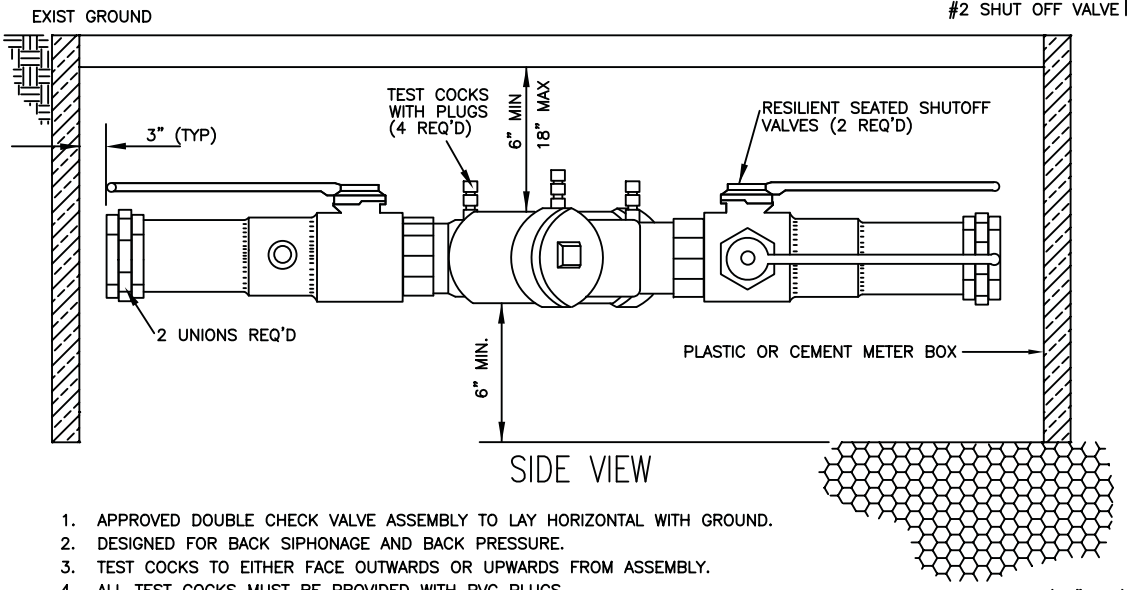

SIDE VIEW

Vertical Installation

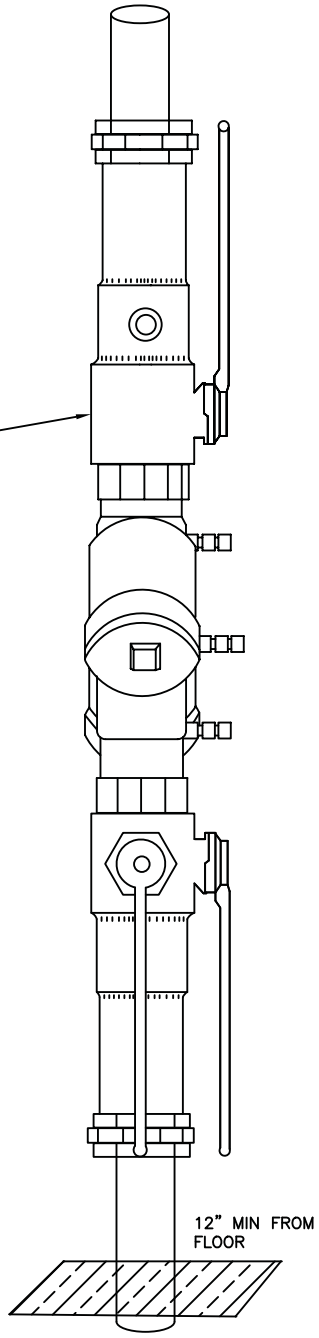

1. APPROVED DOUBLE CHECK VALVE ASSEMBLY TO LAY HORIZONTAL WITH GROUND.
2. DESIGNED FOR BACK SIPHONAGE AND BACK PRESSURE.
3. TEST COCKS TO EITHER FACE OUTWARDS OR UPWARDS FROM ASSEMBLY.
4. ALL TEST COCKS MUST BE PROVIDED WITH PVC PLUGS.
5. THOROUGHLY FLUSH LINES PRIOR TO INSTALLATION OF BACK FLOW PREVENTER.
6. THE DCVA CAN BE INSTALLED ABOVE OR BELOW THE GROUND PROVIDED ALL CLEARANCES ARE MET.
7. DO NOT INSTALL IN AN AREA SUBJECT TO FLOODING.
8. MUST BE PROTECTED FROM FREEZING CONDITIONS.
9. THE BACK FLOW PREVENTION ASSEMBLY MUST BE A WASHINGTON STATE APPROVED MODEL.
10. IF INSTALLED INSIDE A BUILDING THE DCVA SHALL BE INSTALLED NO HIGHER THAN 5 FEET FROM FLOOR TO C/L OF ASSY AND A MIN. OF 12 INCHES FROM FLOOR TO BOTTOM OF ASSY.
    IF INSTALLED IN A VERTICAL CONFIGURATION, ASSY. MUST BE A MINIMUM OF 12 INCHES FROM FLOOR, AND NO HIGHER THAN 5 FEET FROM FLOOR TO C/L OF #2 SHUT OFF VALVE. *ONLY ASSY. WITH APPROVAL FROM WADOH.

MUST BE TESTED AFTER INSTALLATION AND YEARLY THEREAFTER BY A WASHINGTON STATE CERTIFIED BACKFLOW ASSEMBLY TESTER. THE TEST REPORT MUST BE SENT TO THE CITY OF EDMONDS WATER DIVISION

1890–1990

CITY OF EDMONDS

REVISIONS	
APPROVED BY	DATE
D. GEBERT	6/16/03
D. GEBERT	4/2/07

STANDARD DETAIL

RESIDENTIAL DOUBLE CHECK VALVE ASSEMBLY (DCVA)
(STANDARD D.C.V.A. 2" AND SMALLER)

DATE	SCALE	DWG NO.
7/24/01	NTS	E7.7

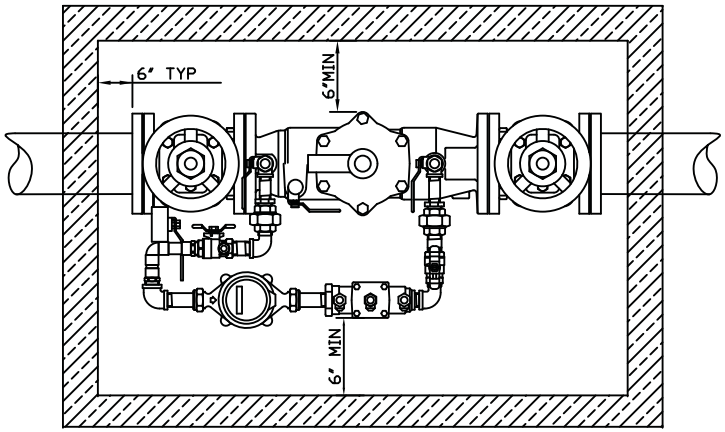

TOP VIEW

1. THE DCDA SHALL BE A WASHINGTON STATE APPROVED– MODEL SHALL BE WATTS 007DCDA OR APPROVED EQUAL.
2. VAULT MUST BE UTILITY VAULT MODEL OR APPROVED EQUAL.
   FOR 2in. DCDA: UTILITY VAULT #644–LA
   FOR 3in. DCDA: UTILITY VAULT #675–LA
3. LIDS FOR VAULT SHALL BE LW HATCH– WATERTIGHT WITH GUTTER AND SIDE DRAIN. SIZE SHALL BE 3' WIDE X 6' LONG.
4. APPROVED DOUBLE CHECK DETECTOR ASSEMBLY TO LAY HORIZONTAL WITH THE GROUND.
5. TEST COCKS TO EITHER FACE OUTWARDS OR UPWARDS FROM ASSEMBLY.
6. ALL TEST COCKS MUST BE PROVIDED WITH PVC PLUGS.
7. THOROUGHLY FLUSH LINES PRIOR TO INSTALLATION OF ASSEMBLY.
8. DO NOT INSTALL IN AN AREA SUBJECT TO FLOODING.
9. MUST BE PROTECTED FROM FREEZING CONDITIONS.

* SIZE OF PIPE USED DICTATES MINIMUM DEPTH OF BOX INCLUDING REQUIRED CLEARANCES.
** HEIGHT TO TOP OF STEM BASED ON THE SIZE OF PIPE USED.

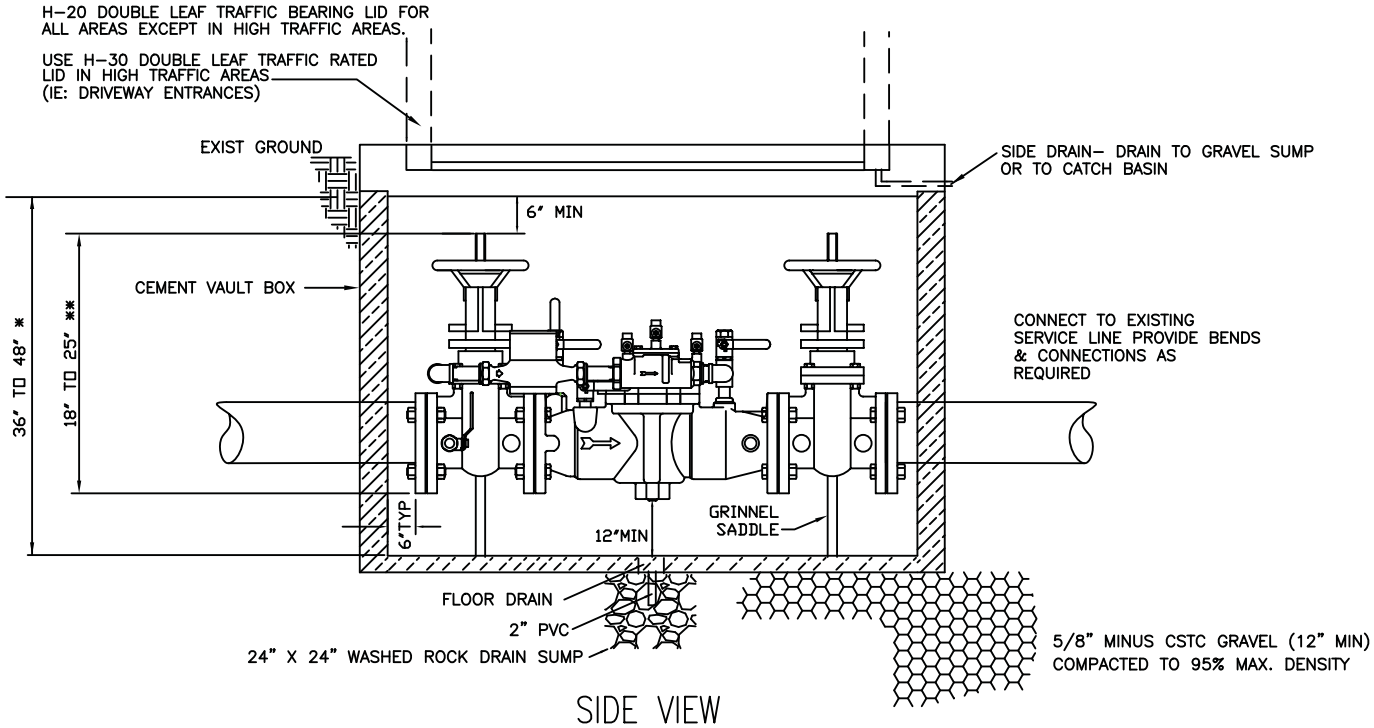

SIDE VIEW

MUST BE TESTED AFTER INSTALLATION AND YEARLY THEREAFTER BY A WASHINGTON STATE CERTIFIED DCDA ASSEMBLY TESTER. THE TEST REPORT MUST BE SENT TO THE CITY OF EDMONDS WATER DIVISION

CITY OF EDMONDS

STANDARD DETAIL

DOUBLE CHECK DETECTOR ASSEMBLY (DCDA) FOR 2"

REVISIONS		
	APPROVED BY	DATE

DATE	SCALE	DWG NO.
4/2/07	NTS	E7.7.1

1890–1990

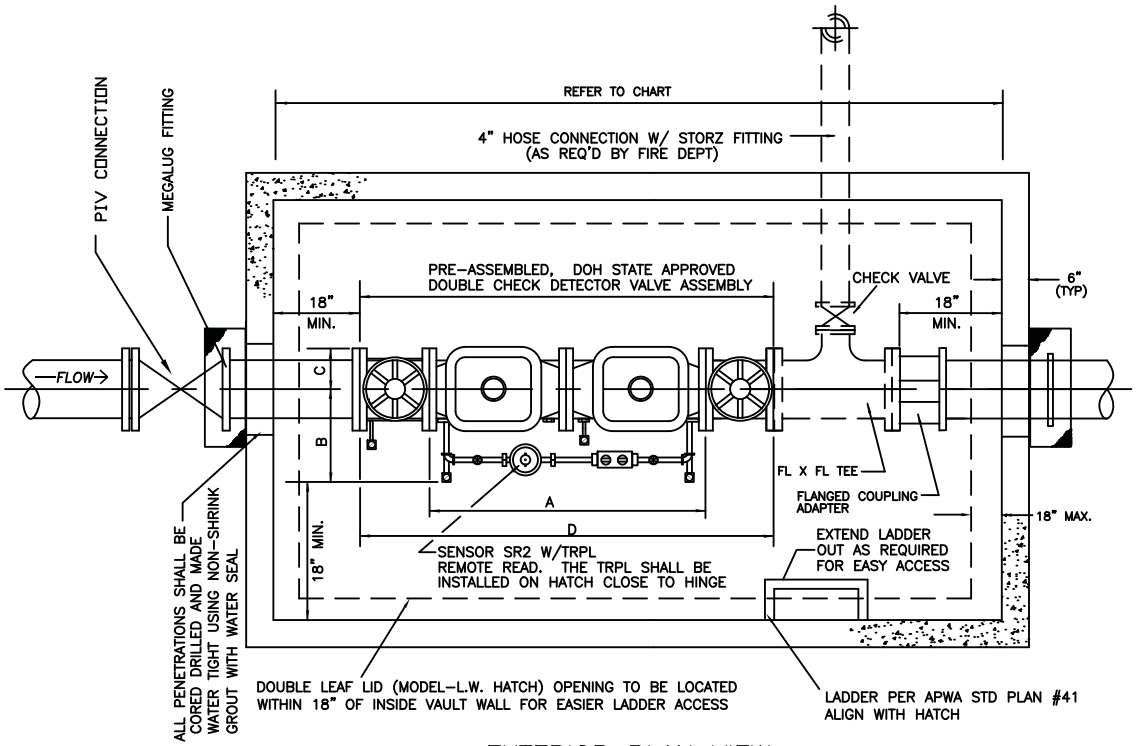

EXTERIOR PLAN VIEW

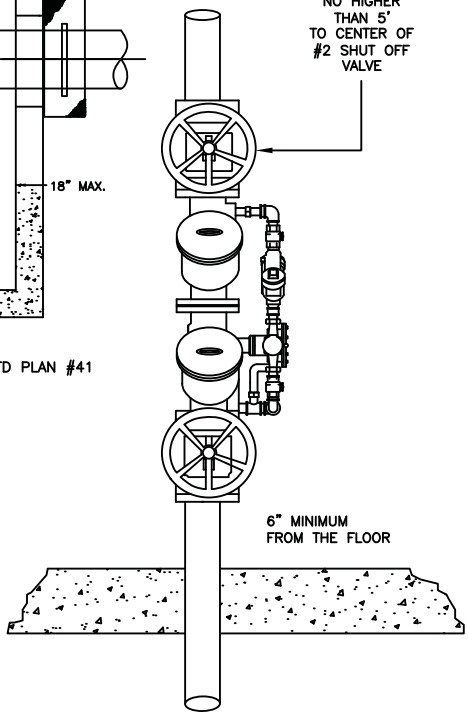

SENSOR SR2 WITH ECR/WP REMOTE READ.
THE ECR/WP SHALL BE INSTALLED ON A
OUTSIDE WALL FOR EASY METER READING.

INDOOR VERTICAL INSTALLATION

GENERAL NOTES:

1. ACCESSES BY L.W. HATCH: TYPE "D" (HD-10 PEDESTRIAN LOAD; H-30 TRAFFIC LOAD) WITH SIDE OUTLET GUTTER DRAIN.
2. VAULT COVER GUTTER DRAIN SHALL CONNECT TO A DRY WELL OR CATCH BASIN.
3. DCDA MUST BE TESTED BY A CERTIFIED BACKFLOW ASSEMBLY TESTER.
4. ALL TEST COCKS MUST BE PROVIDED WITH PCV PLUGS.
5. A CITY APPROVED VALVE IS REQUIRED BETWEEN THE SUPPLY MAIN AND THE VAULT.
6. VAULT SHALL BE PLACED ON PRIVATE PROPERTY AT PROPERTY LINE.
7. FOR COMMERCIAL BUILDINGS THAT HAVE NO SET BACK REQUIREMENTS, THE DCDA CAN BE MOUNTED ON THE WALL ADJACENT TO THE ROW WHERE THE LINE TIES INTO THE MAIN. (SEE DETAIL E 7.19)

VAULT SIZES

METER SIZE AND TYPE	APPROXIMATE EQUIP DIMENSIONS				MINIMUM INSIDE VAULT DIMENSIONS (EXCLUDES SIAMESE CONNECTION)		
	A	B	C	D	LENGTH	WIDTH	HEIGHT
4" X 3/4"	2'-9"	1'-1"	0'-6"	4'-3"	10'-0"	5'-0"	6'-6''
6" X 3/4"	3'-9"	1'-2"	0'-8"	5'-6"	11'-0"	6'-0"	6'-6''
8" X 3/4"	4'-5"	1'-4"	0'-9"	6'-4"	12'-0"	6'-0"	6'-6''
10" X 1"	6'-0"	1'-8"	0'-11"	8'-6"	14'-6"	7'-0"	6'-6''

1890-1990

CITY OF EDMONDS

REVISIONS	
APPROVED BY	DATE
D. GEBERT	6/16/03
D. GEBERT	10/6/03
D. GEBERT	4/2/07

STANDARD DETAIL

DOUBLE CHECK DETECTOR ASSEMBLY (DCDA) PLAN
(COMMERCIAL/MULTI-FAMILY)

DATE	SCALE	DWG NO.
7/24/01	NTS	E7.8

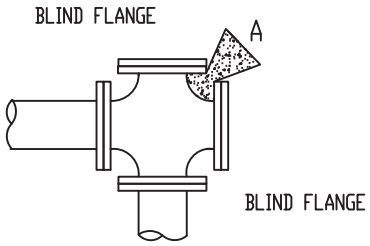

CAPPED CROSS

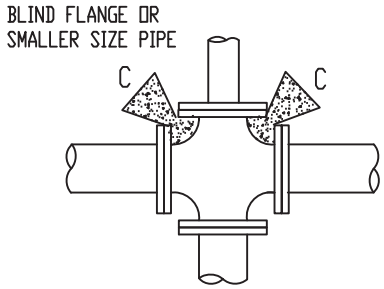

CROSS

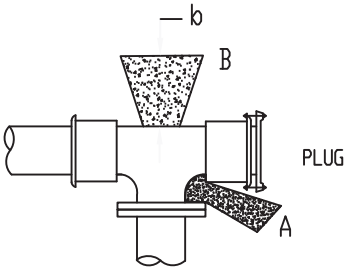

TEE W/PLUG

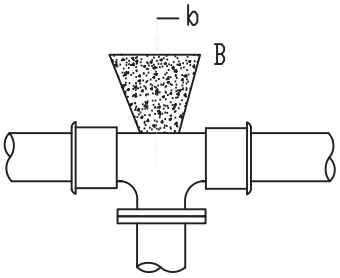

TEE

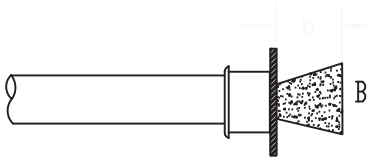

CAP

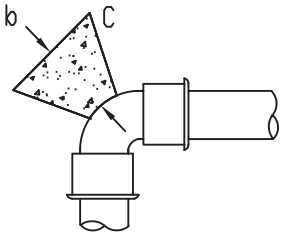

90° BEND

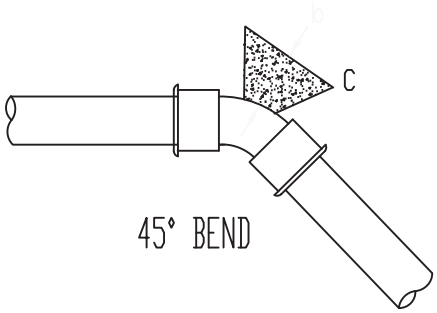

45° BEND

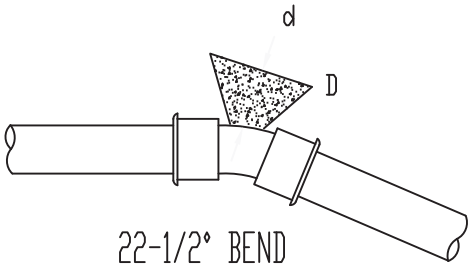

22-1/2° BEND

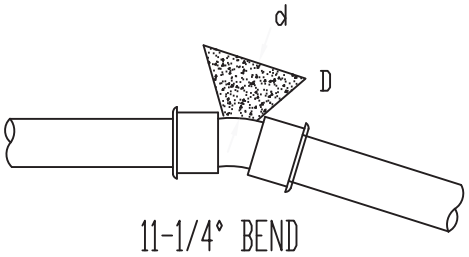

11-1/4° BEND

THRUST BLOCK TABLE

MIN. BEARING AREA AGAINST UNDISTURBED SOIL

PIPE SIZE	SQUARE FEET A	B	C	D	E	MIN. DIST (IN FEET) b	d
4"	3	1	1	1	1	1	0.5
6"	4	4	2	1	1	1	0.5
8"	7	6	4	2	1	1.3	0.7
10"	11	10	6	3	2	1.6	0.9
12"	16	14	9	5	3	1.9	1.1
16"	29	25	16	8	4	2.6	1.4

NOTES:

1. BEARING AREA OF CONCRETE THRUST BASED ON 200 PSI PRESSURE AND SAFE SOIL. BEARING LOAD OF 2,000 POUNDS PER SQUARE FOOT.
2. AREAS MUST BE ADJUSTED FOR OTHER PIPE SIZES, PRESSURES, AND SOIL CONDITIONS.
3. CONCRETE BLOCKING SHALL BE CAST IN PLACE AND HAVE A MINIMUM OF 1/4 SQUARE FOOT BEARING AGAINST THE FITTING.
4. BLOCK SHALL BEAR AGAINST FITTINGS ONLY AND SHALL BE CLEAR OF JOINTS TO PERMIT TAKING UP OR DISMANTLING A JOINT.
5. CONTRACTOR SHALL INSTALL BLOCKING ADEQUATE TO WITHSTAND FULL TEST PRESSURE AS WELL AS TO CONTINUOUSLY WITHSTAND OPERATIONAL PRESSURE UNDER ALL CONDITIONS OF SERVICE.
6. BLOCKING MAY BE REDUCED WITH USE OF RESTRAINED JOINTS ADJACENT TO FITTINGS.

1890–1990

CITY OF EDMONDS

REVISIONS	
APPROVED BY	DATE

STANDARD DETAIL

CONCRETE THRUST BLOCKING

DATE	SCALE	DWG NO.
7/24/01	NTS	E7.9

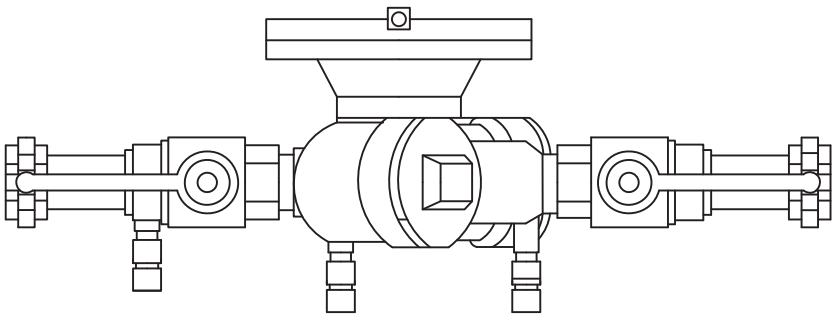

TOP VIEW

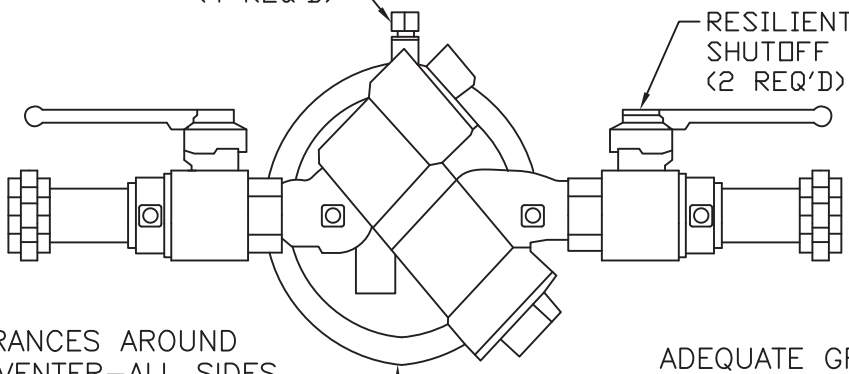

SIDE VIEW

NOTE:

1. APPROVED REDUCED PRESSURE BACKFLOW ASSEMBLY TO LAY HORIZONTAL ONLY.
2. DESIGNED FOR BACK SIPHONAGE AND BACK PRESSURE.
3. THOROUGHLY FLUSH LINES PRIOR TO INSTALLATION OF BACKFLOW PREVENTER.
4. DO NOT INSTALL IN AN AREA SUBJECT TO FLOODING.
5. MUST BE ACCESSIBLE.
6. MUST BE PROTECTED FROM FREEZING CONDITIONS.
7. THE BACKFLOW ASSEMBLY SHALL BE A STATE APPROVED MODEL.
8. A PLUMBING PERMIT IS REQUIRED– PLEASE CONTACT LOCAL PLUMBING PERMIT CENTER.
9. MUST BE TESTED AFTER INSTALLATION AND YEARLY THEREAFTER BY WASHINGTON STATE CERTIFIED BACKFLOW ASSEMBLY TESTER. TEST RESULTS SHALL BE SENT TO THE CITY OF EDMONDS PUBLIC WORKS.

(ABOVE GROUND INSTALLATION ONLY)

1890–1990

CITY OF EDMONDS

REVISIONS	
APPROVED BY	DATE
D. GEBERT	10/6/03
D. GEBERT	5/26/06

STANDARD DETAIL

REDUCED PRESSURE BACKFLOW ASSEMBLY 2" AND SMALLER (RPBA)

DATE	SCALE	DWG NO.
6/16/03	NTS	E 7.10

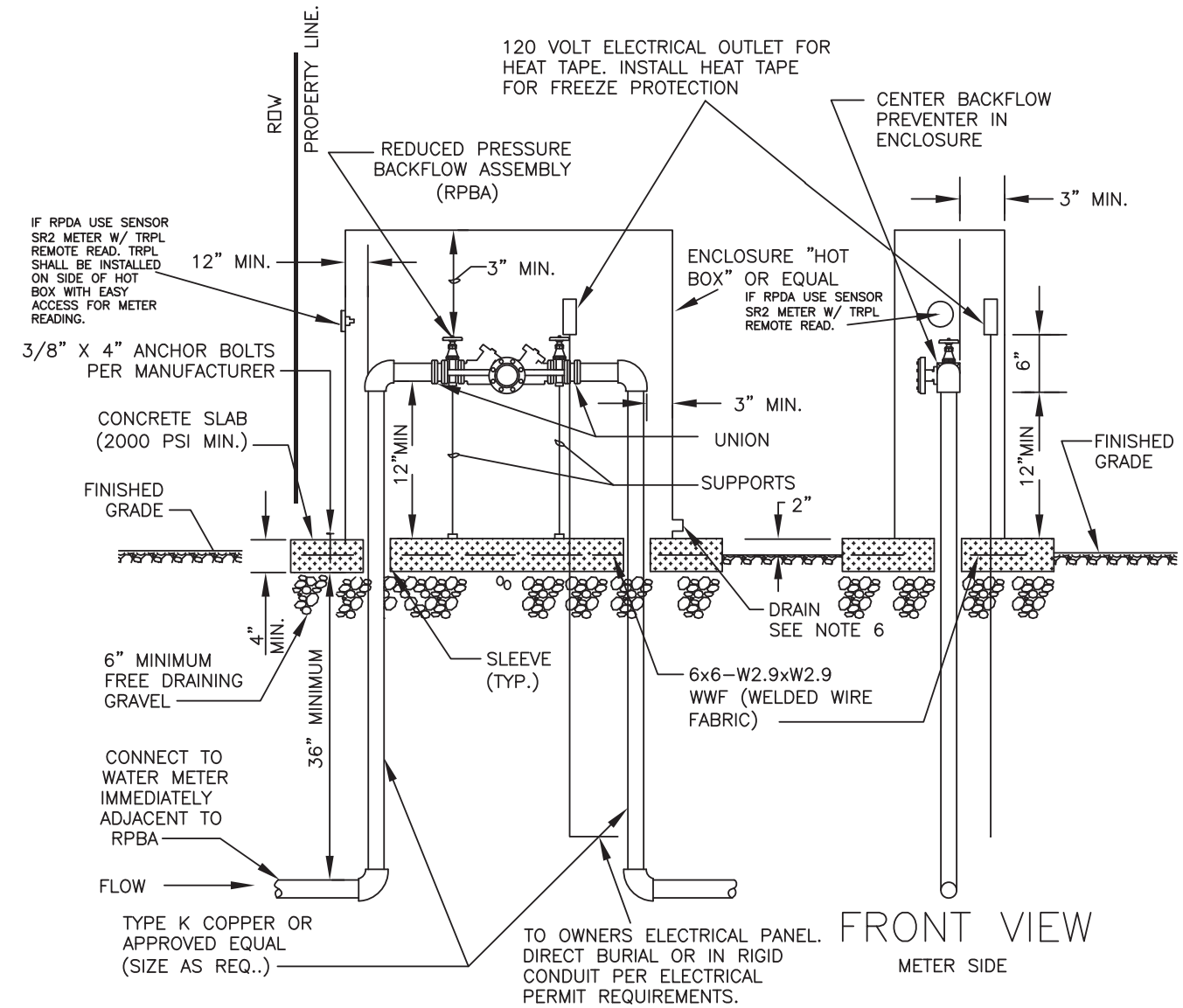

NOTES:

1. PROVIDE CITY APPROVED SUPPORT FOR DEVICES LARGER THAN 1" DIAMETER.
2. OWNER SHALL FURNISH, INSTALL AND MAINTAIN THE RPBA OR RPDA AND ALL PIPING AND APPURTENANCES SHOWN ON THIS PLAN.
3. CITY WILL PROVIDE INSPECTION. INITIAL TEST OF THE RPBA OR RPDA PRIOR TO ESTABLISHMENT OF WATER SERVICE WILL BE DONE BY A STATE CERTIFIED BAT TESTER
4. REDUCED PRESSURE BACKFLOW ASSEMBLIES SHALL BE STATE APPROVED DEVICES.
5. ANNUAL TESTING OF RPBA AND RPDA REQUIRED BY OWNER.
6. DRAIN SHALL BE SIZED IN ACCORDANCE WITH AWWA CROSS CONNECTION CONTROL FIGURE 6-8 (SEE STD DETAIL SHEET E 7.11.1)
7. ENCLOSURES SHALL BE LOCATED ON PRIVATE PROPERTY.

Est. 1890

CITY OF EDMONDS

REVISIONS	
APPROVED BY	DATE
D. GEBERT	10/6/03
D. GEBERT	4/2/07

STANDARD DETAIL

HOT BOX ASSEMBLY FOR REDUCED PRESSURE BACKFLOW ASSEMBLY (RPBA) AND RPDA

DATE	SCALE	DWG NO.
6/16/03	NTS	E 7.11

AWWA CROSS CONNECTION
CONTROL MANUAL

RPBA Discharge Rates

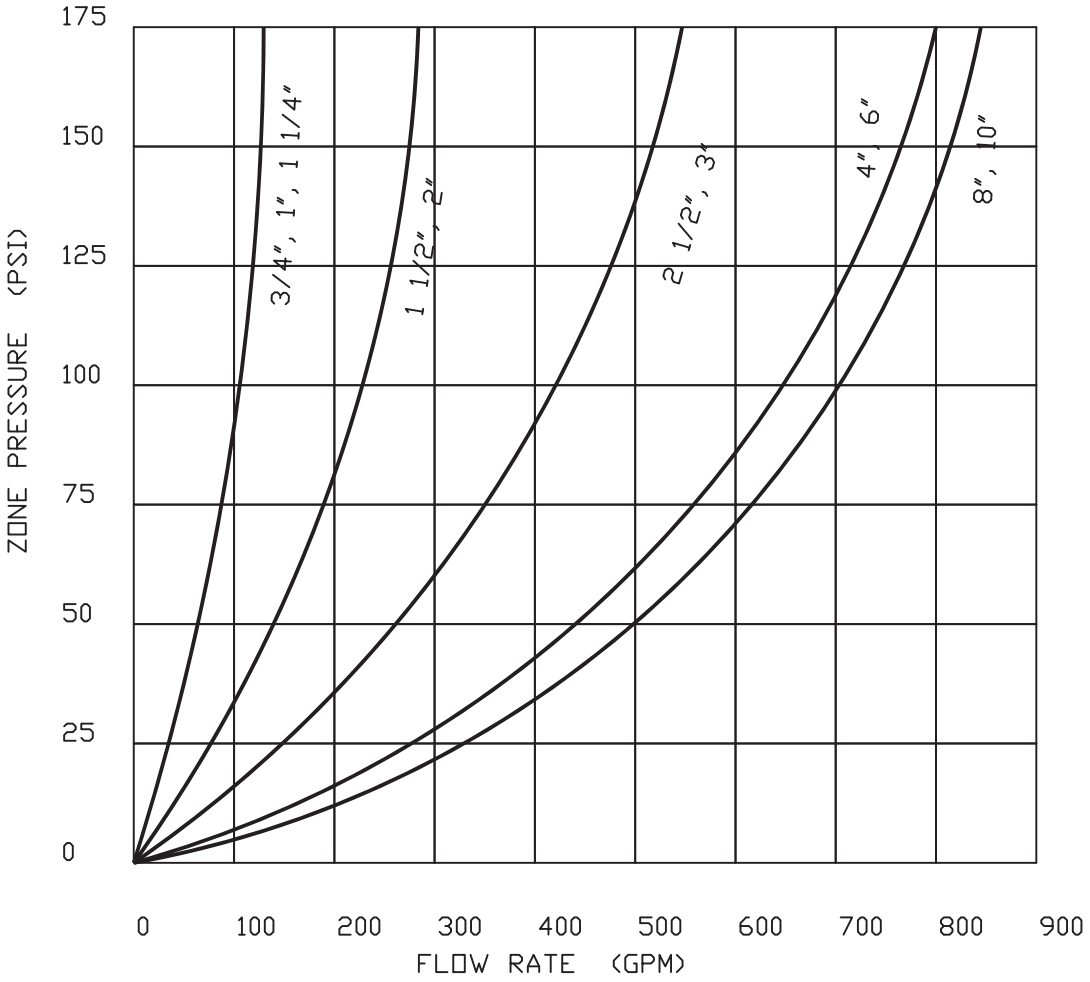

Figure 6-8
Approximate Relief Valve Discharge Rates
For Reduced Pressure Backflow Assemblies

Care should be taken to ensure that the entire drainage system has adequate capacity to carry the continuous discharge rates shown above. The following are typical flow rates as sized by one floor drain manufacturer and represent only the floor drain capacity:

Size:	2"	3"	4"	6"	8"
Capacity (gpm):	55	112	170	450	760

For parallel assemblies, the drainage system should be designed for the discharge from both assemblies.

CITY OF EDMONDS

Est. 1890

REVISIONS		STANDARD DETAIL		
APPROVED BY	DATE	RPBA DISCHARGE RATES (FIGURE 6-8)		
		DATE 6/16/03	SCALE NTS	DWG NO. E 7.11.1

A CITY APPROVED VALVE IS REQ'D BETWEEN THE SUPPLY MAIN AND THE VAULT

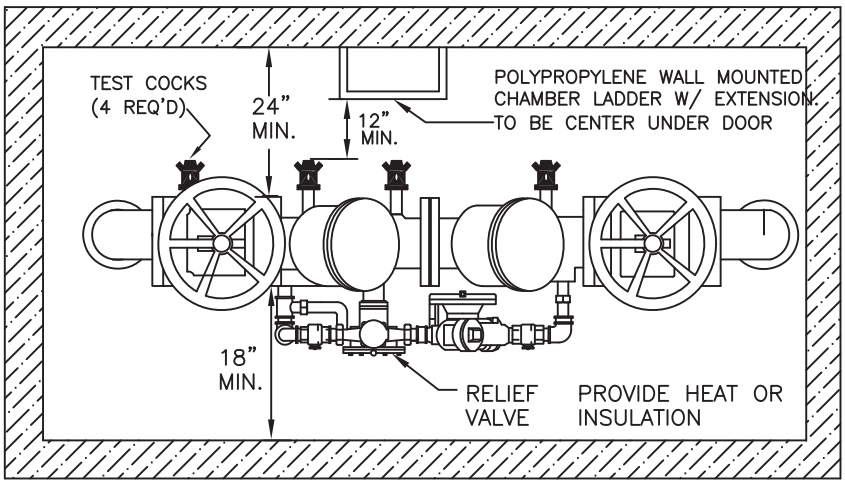

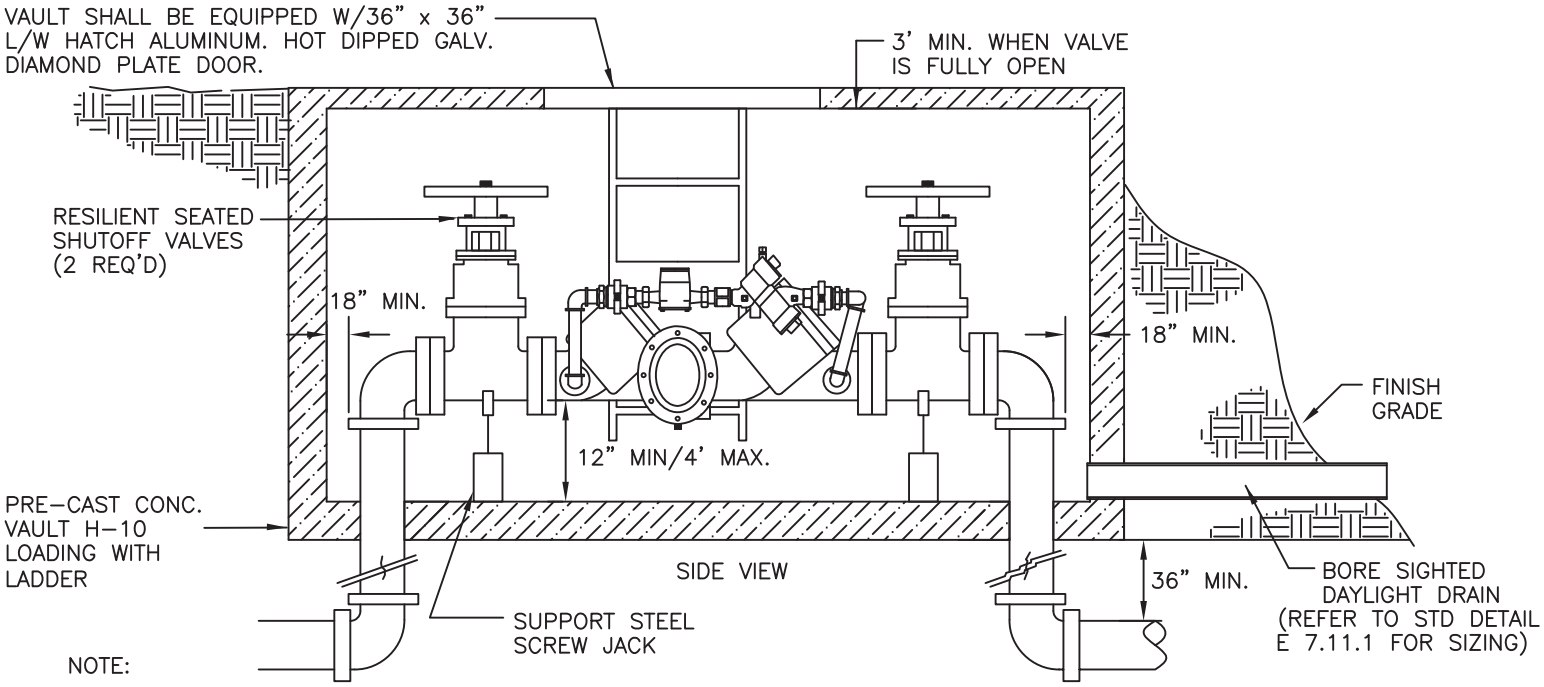

NOTE:

1. SEMI-BURIED PITS MUST BE APPROVED BY CITY OF EDMONDS ENGINEERING DIVISION AND PUBLIC WORKS DEPARTMENT. AIR VALVE OR RELIEF VALVES MUST BE INSTALLED ABOVE THE GROUND OR MAXIMUM FLOOD LEVEL WITH AN APPROVED AIR GAP BETWEEN THE RELIEF VALVE AND A DAYLIGHT DRAIN. THE DAYLIGHT DRAIN FROM ABOVE GRADE OR SEMI-BURIED VAULT MUST:
   a. DISCHARGE ONTO PRIVATE PROPERTY AND TOWARD ON-SITE DRAINAGE.
   b. BE ABLE TO BE BORE SIGHTED TO A DISCHARGE POINT INSTALLED ABOVE THE GROUND OR MAXIMUM FLOOD LEVEL, WHICH EVER IS GREATER.
   c. BE ABLE TO HANDLE THE VOLUME OF WATER THAT POTENTIALLY COULD BE DISCHARGED FROM THE RELIEF VALVE PORT. REFER TO STD DETAIL E 7.11.1 FOR SIZING.

RPBA'S: SEE DETAIL E 7.12 FOR INFORMATION NOT SHOWN
RPDA'S: SEE DETAIL E 7.13 FOR INFORMATION NOT SHOWN

Est. 1890

CITY OF EDMONDS

REVISIONS	
APPROVED BY	DATE
D. GEBERT	01/28/04

STANDARD DETAIL

SEMI-BURIED REDUCED PRESSURE ASSEMBLY
RPBA/RPDA- 2.5" AND LARGER

DATE	SCALE	DWG NO.
6/16/03	NTS	E 7.11.2

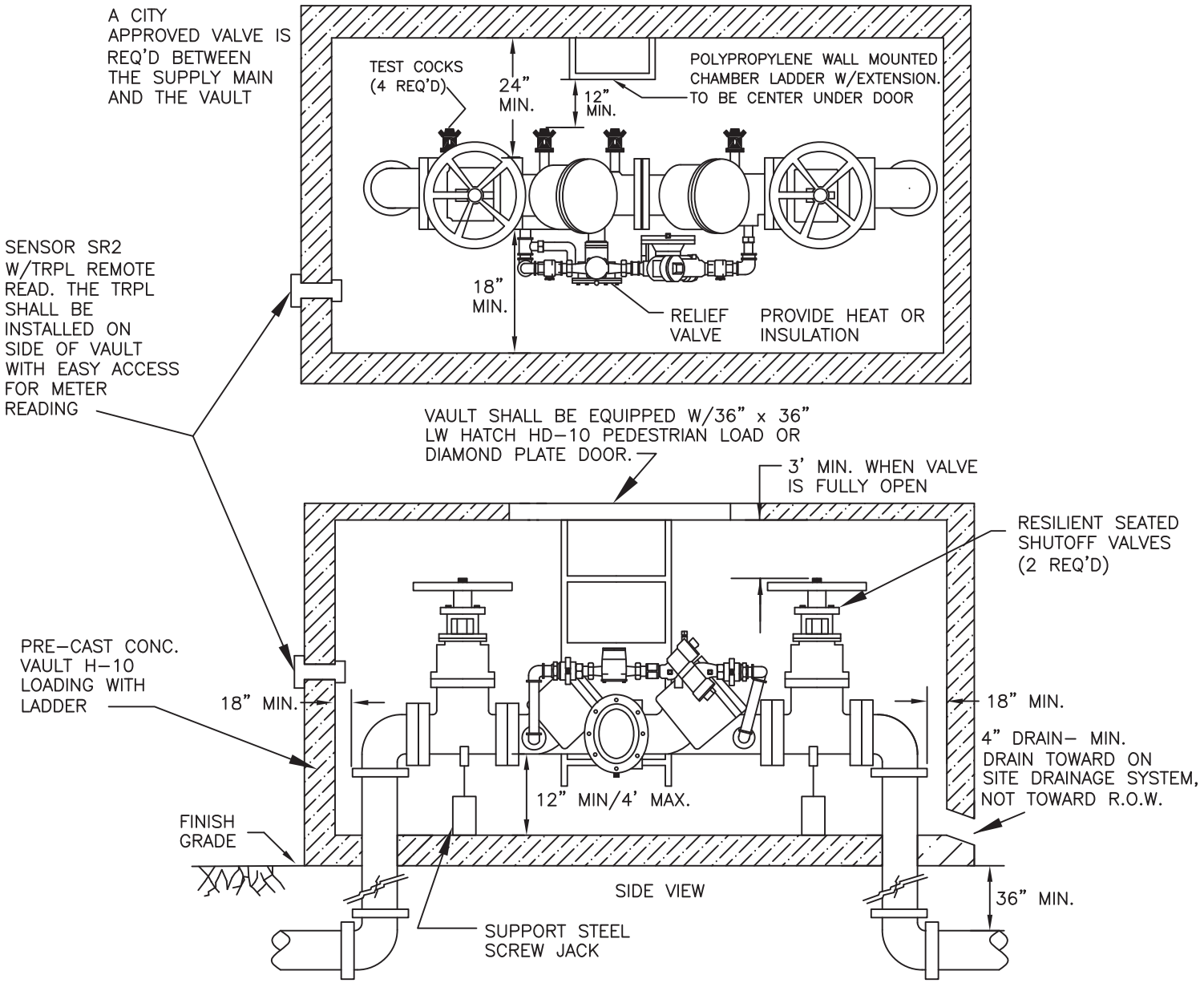

NOTE:

1. APPROVED REDUCED PRESSURE BACKFLOW ASSEMBLY TO LAY HORIZONTAL ONLY.
2. DESIGNED FOR BACK SIPHONAGE AND BACK PRESSURE.
3. THE WATER LINE SHALL BE DISINFECTED, FLUSHED, AND PRESSURE TESTED PRIOR TO INSTALLING THE BACKFLOW ASSEMBLY. THE BACKFLOW ASSEMBLY SHALL BE PROTECTED FROM FREEZING AND FLOODING.
4. ALL PIPE, VALVES, AND FITTING JOINTS, FROM SUPPLY MAIN, SHALL BE FLANGED AND RESTRAINED.
5. GROUT PIPE ENTRANCE AND EXIT, IN VAULT, WITH WATER-TITE GROUT.
6. VAULTS SHALL BE INSTALLED AT PROPERTY LINE OR EASEMENT LINE.
7. VAULTS SHALL HAVE A MINIMUM OF 3' CLEARANCE FROM ALL STRUCTURES.
8. THE BACKFLOW ASSEMBLY SHALL BE TESTED AFTER INSTALLATION AND PRIOR TO ACCEPTANCE AND ALSO YEARLY THEREAFTER BY A CERTIFIED BACKFLOW ASSEMBLY TESTER. TEST RESULTS SHALL BE SENT TO THE CITY OF EDMONDS PUBLIC WORKS.

(ABOVE GROUND INSTALLATION ONLY)

Est. 1890

CITY OF EDMONDS

REVISIONS	
APPROVED BY	DATE
D. GEBERT	01/28/04
D. GEBERT	5/26/06

STANDARD DETAIL

REDUCED PRESSURE DETECTOR ASSEMBLY (RPDA) 2.5" AND LARGER

DATE	SCALE	DWG NO.
6/16/03	NTS	E 7.12

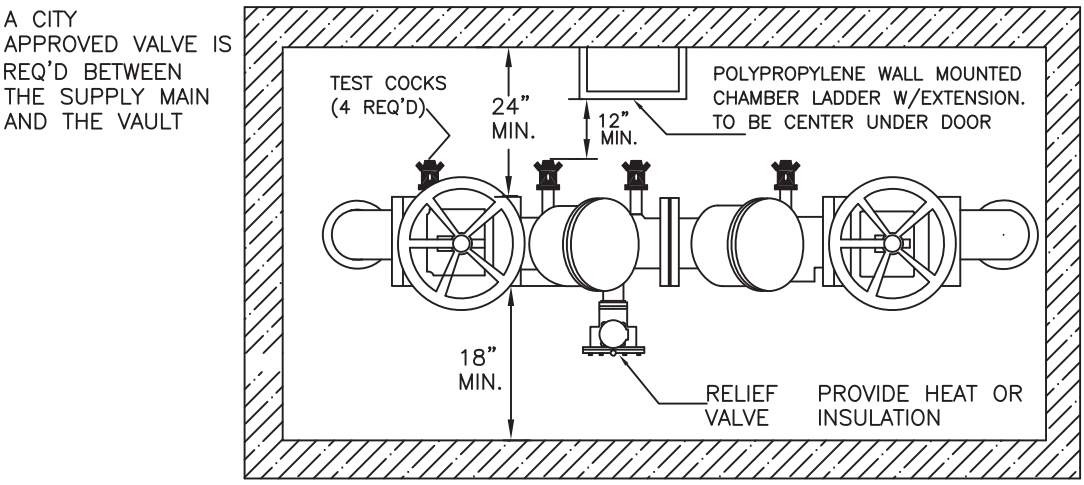

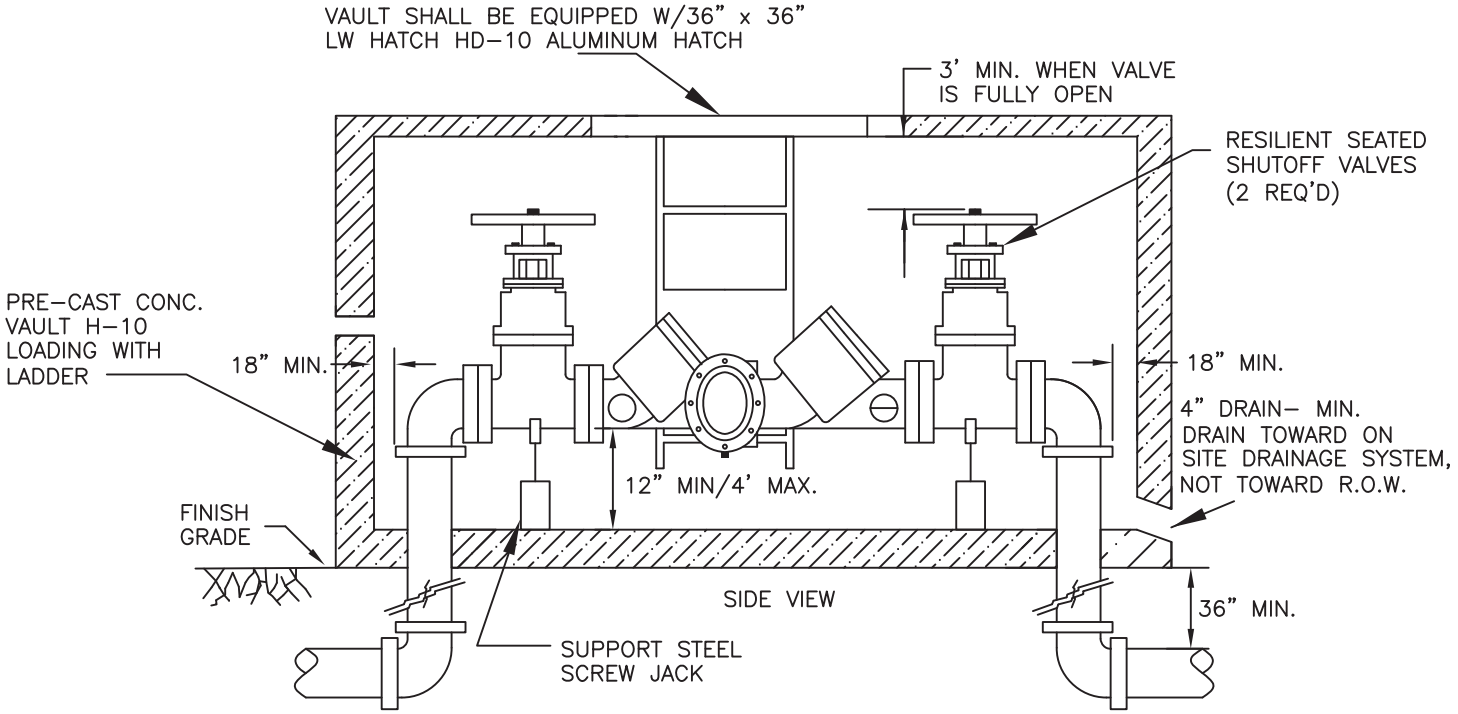

NOTE:

1. APPROVED REDUCED PRESSURE BACKFLOW ASSEMBLY TO LAY HORIZONTAL ONLY.
2. DESIGNED FOR BACK SIPHONAGE AND BACK PRESSURE.
3. THE WATER LINE SHALL BE DISINFECTED, FLUSHED, AND PRESSURE TESTED PRIOR TO INSTALLING THE BACKFLOW ASSEMBLY. THE BACKFLOW ASSEMBLY SHALL BE PROTECTED FROM FREEZING AND FLOODING.
4. ALL PIPE, VALVES, AND FITTING JOINTS, FROM SUPPLY MAIN SHALL BE FLANGED AND RESTRAINED.
5. GROUT PIPE ENTRANCE AND EXIT, IN VAULT, WITH WATER-TITE GROUT.
6. VAULTS SHALL BE INSTALLED AT PROPERTY LINE OR EASEMENT LINE.
7. VAULTS SHALL HAVE A MINIMUM OF 3' CLEARANCE FROM ALL STRUCTURES.
8. THE BACKFLOW ASSEMBLY SHALL BE TESTED AFTER INSTALLATION AND PRIOR TO ACCEPTANCE AND ALSO YEARLY THEREAFTER BY A CERTIFIED BACKFLOW ASSEMBLY TESTER. TEST RESULTS SHALL BE SENT TO THE CITY OF EDMONDS PUBLIC WORKS.

(ABOVE GROUND INSTALLATION ONLY)

Est. 1890

CITY OF EDMONDS

REVISIONS	
APPROVED BY	DATE
D. GEBERT	01/28/04
D. GEBERT	5/26/06

STANDARD DETAIL

REDUCED PRESSURE BACKFLOW ASSEMBLY (RPBA) 2.5" AND LARGER

DATE	SCALE	DWG NO.
06/16/03	NTS	E 7.13

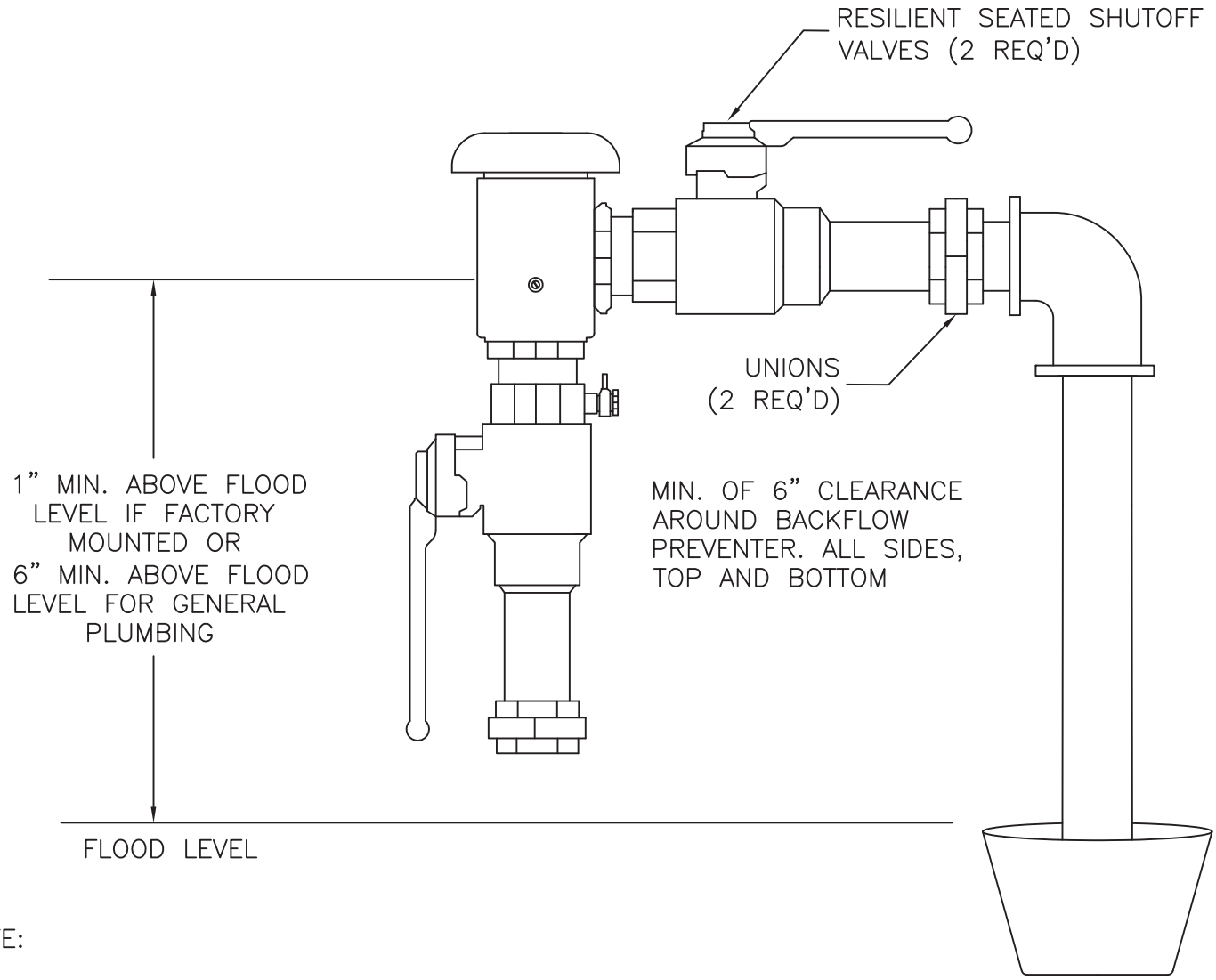

NOTE:

1. APPROVED PRESSURE VACUUM BREAKER ASSEMBLY MUST BE INSTALLED VERTICALLY, 1" MIN. ABOVE FLOOD LEVEL IF FACTORY MOUNTED OR 6" MIN. ABOVE FLOOD LEVEL FOR GENERAL PLUMBING.
2. DESIGNED FOR BACK SIPHONAGE ONLY, NOT FOR BACK PRESSURE.
3. THOROUGHLY FLUSH LINES PRIOR TO INSTALLATION OF BACKFLOW PREVENTER.
4. IF A SVBA IS INSTALLED INDOORS, CONSIDERATION MUST BE GIVEN TO WATER LEAKAGE IF THE BACKFLOW PREVENTER FAILS (EXCESSIVE WATER SPILLAGE)
5. DO NOT INSTALL IN AN AREA SUBJECT TO FLOODING.
6. MUST BE PROTECTED FROM FREEZING CONDITIONS.
7. THE BACKFLOW ASSEMBLY SHALL BE A STATE APPROVED MODEL.
8. A PLUMBING PERMIT IS REQUIRED– PLEASE CONTACT LOCAL PLUMBING PERMIT CENTER.
9. MUST BE TESTED AFTER INSTALLATION AND YEARLY THEREAFTER BY WASHINGTON STATE CERTIFIED BACKFLOW ASSEMBLY TESTER. TEST RESULTS SHALL BE SENT TO THE CITY OF EDMONDS PUBLIC WORKS.

(ABOVE GROUND INSTALLATION ONLY)

Est. 1890

CITY OF EDMONDS

REVISIONS	
APPROVED BY	DATE

STANDARD DETAIL

SPILL-RESISTANT PRESSURE VACUUM BREAKER (SVBA)

DATE	SCALE	DWG NO.
6/16/03	NTS	E 7.14

APPROVED AIR GAP SEPARATION

AN APPROVED AIR GAP IS A PHYSICAL SEPARATION BETWEEN THE FREE FLOWING DISCHARGE END OF A POTABLE WATER SUPPLY PIPELINE AND THE OVERFLOW RIM OF AN OPEN OR NON-PRESSURE RECEIVING VESSEL. THESE VERTICAL, PHYSICAL SEPARATIONS MUST BE AT LEAST TWICE THE DIAMETER OF THE INLET PIPE BUT NEVER LESS THAN ONE INCH. IF SPLASHING IS A PROBLEM, TUBULAR SCREENS MAY BE ATTACHED OR THE SUPPLY LINE OUTLET MAY BE CUT AT A 45 DEGREE ANGLE. IF SUPPLY LINE IS CUT AT A 45 DEGREE ANGLE THE AIR GAP DISTANCE IS MEASURED FROM THE CENTER OF THE ANGLE. HOSES ARE NOT ALLOWED. BYPASSES ARE NOT ALLOWED. THE INSPECTION OF AIR GAPS SHALL BE INCLUDED IN THE YEARLY TESTING PROGRAM FOR BACKFLOW DEVICES.

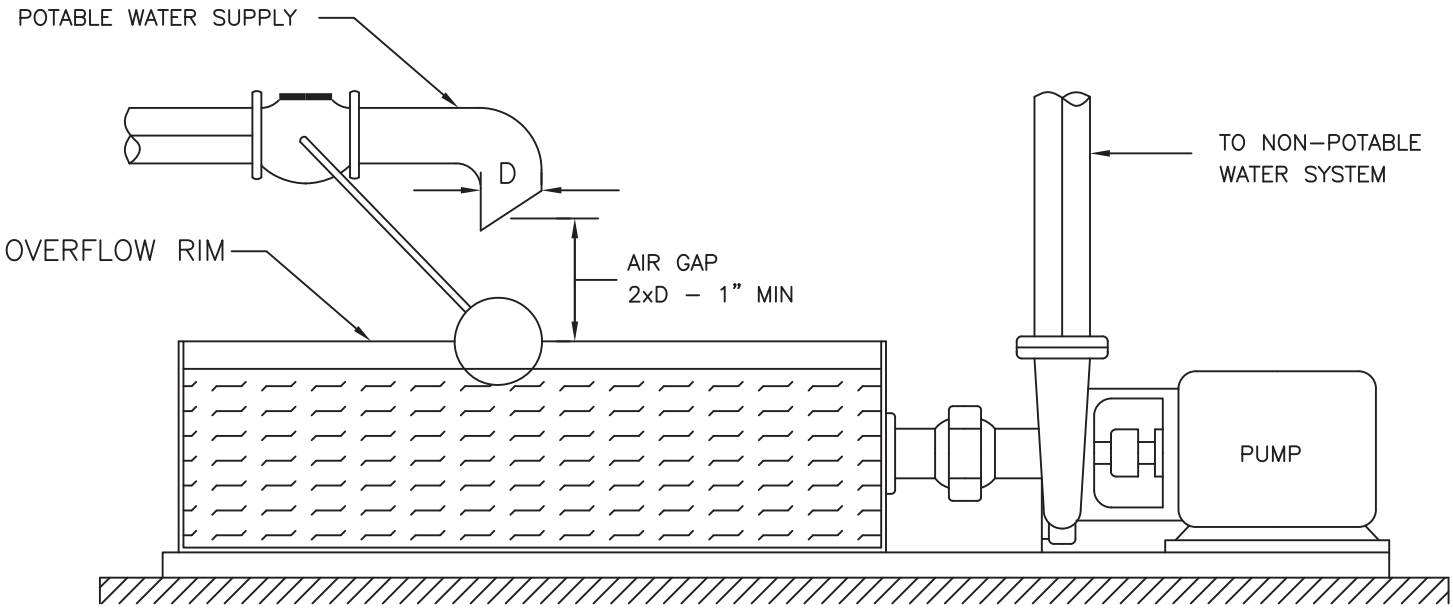

CITY OF EDMONDS

Est. 1890

REVISIONS	
APPROVED BY	DATE

STANDARD DETAIL

AIR GAP FOR MAKEUP TANK (AG)

DATE	SCALE	DWG NO.
6/16/03	NTS	E 7.15

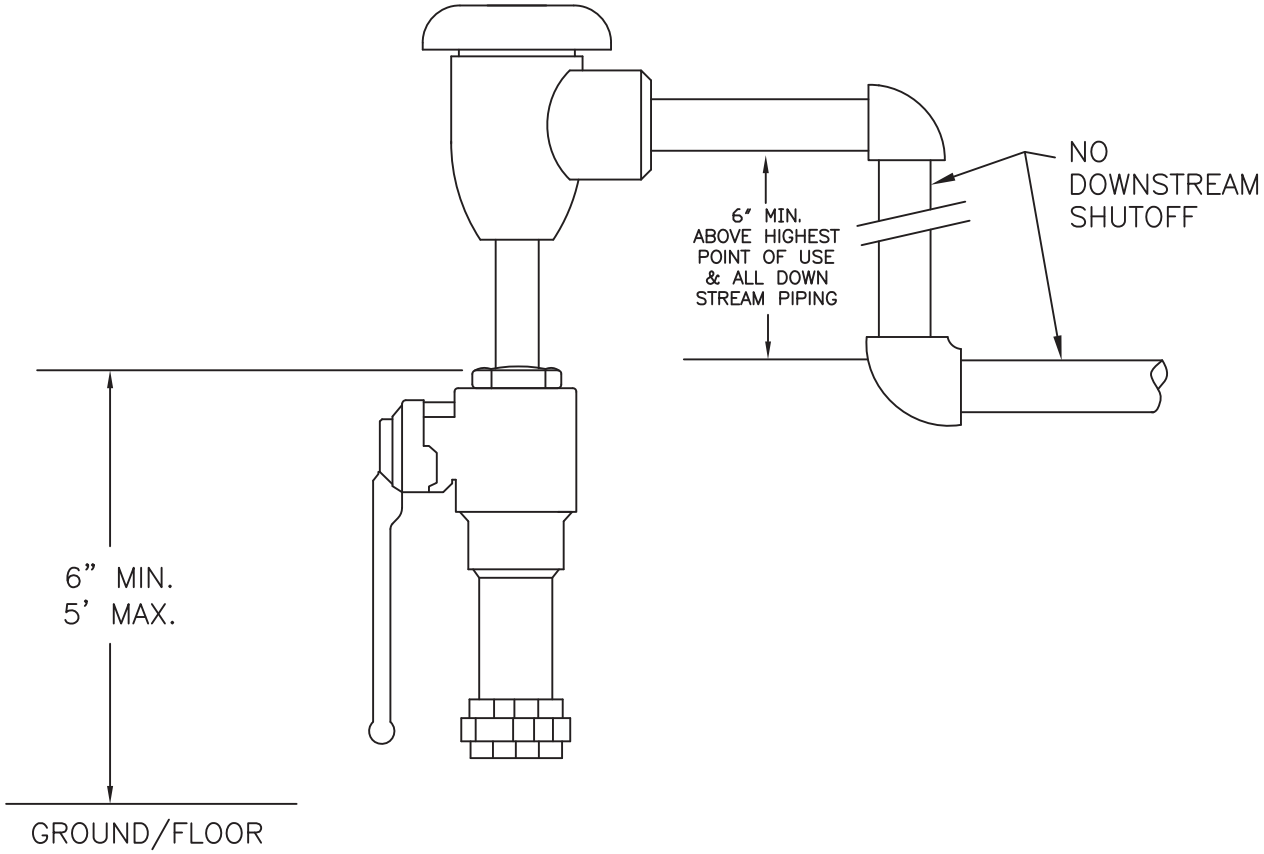

NOTE:

1. APPROVED PRESSURE VACUUM BREAKER ASSEMBLY MUST BE INSTALLED VERTICALLY, 6" MIN. ABOVE THE HIGHEST POINT OF USE AND ALL DOWN STREAM PIPING.
2. 6" MIN. ABOVE FLOOD LEVEL FOR GENERAL PLUMBING.
3. DESIGNED FOR BACK SIPHONAGE ONLY, NOT FOR BACK PRESSURE.
4. THOROUGHLY FLUSH LINES PRIOR TO INSTALLATION OF BACKFLOW PREVENTER.
5. IF A AVB IS INSTALLED INDOORS, CONSIDERATION MUST BE GIVEN TO WATER LEAKAGE IF THE BACKFLOW PREVENTER FAILS (EXCESSIVE WATER SPILLAGE)
6. DO NOT INSTALL IN AN AREA SUBJECT TO FLOODING.
7. MUST BE PROTECTED FROM FREEZING CONDITIONS.
8. THE BACKFLOW ASSEMBLY SHALL BE A STATE APPROVED MODEL.
9. A PLUMBING PERMIT IS REQUIRED– OBTAIN PERMIT FROM CITY OF EDMONDS DEVELOPMENT SERVICES.
10. NO DOWNSTREAM VALVES ARE ALLOWED.
11. THIS DEVICE DOES NOT REQUIRE TESTING BY A BACKFLOW ASSEMBLY TESTER.

(ABOVE GROUND INSTALLATION ONLY)

Est. 1890

CITY OF EDMONDS

REVISIONS		STANDARD DETAIL		
APPROVED BY	DATE	ATMOSPHERIC/ANTI-SIPHON VACUUM BREAKER ASSEMBLY 2" AND SMALLER (AVB)		
		DATE 6/16/03	SCALE NTS	DWG NO. E 7.16

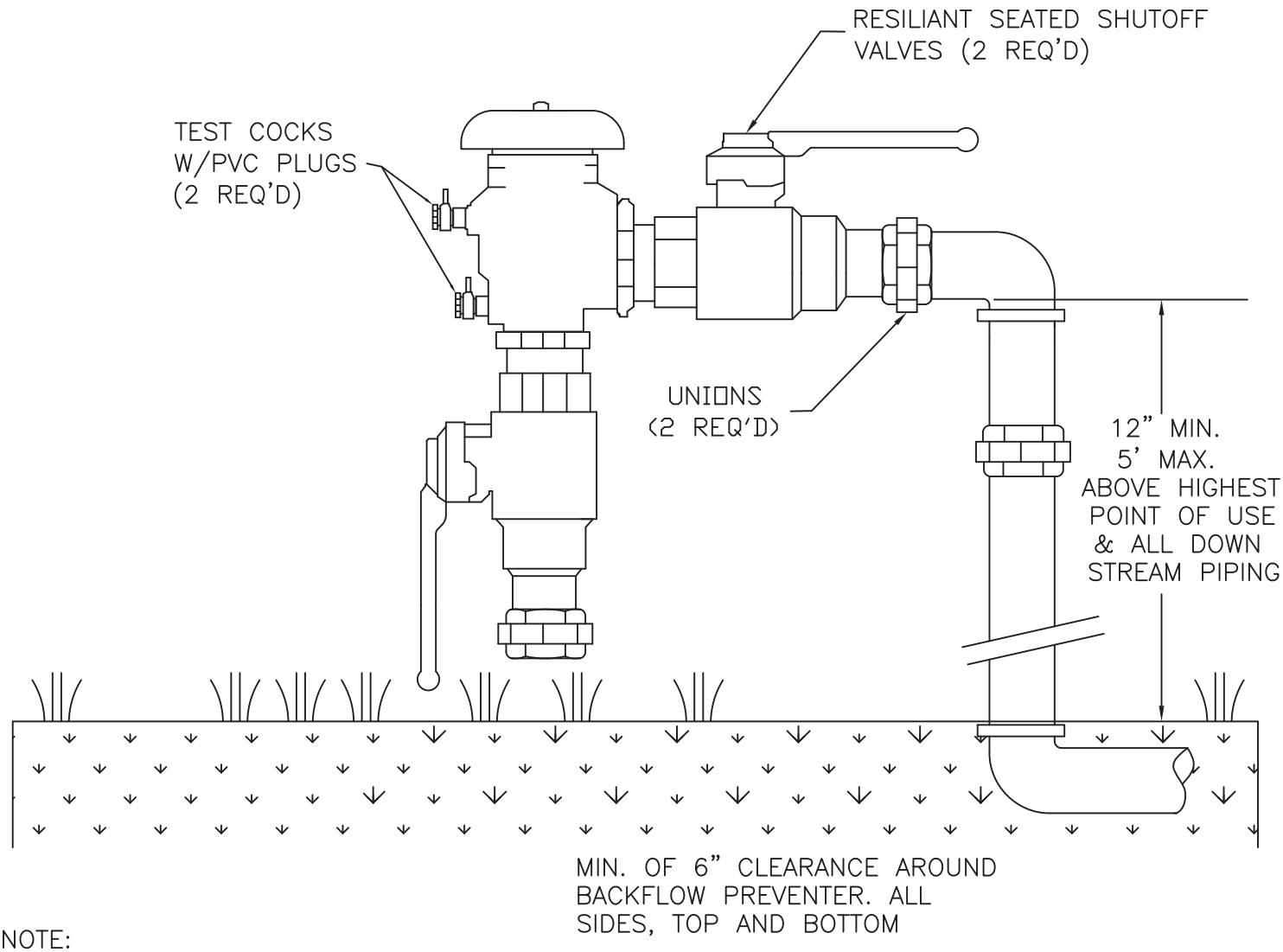

NOTE:

1. APPROVED PRESSURE VACUUM BREAKER ASSEMBLY MUST BE INSTALLED VERTICALLY, 12" MIN. – 5' MAX. ABOVE THE HIGHEST POINT OF USE AND ALL DOWN STREAM PIPING.
2. DESIGNED FOR BACK SIPHONAGE ONLY, NOT FOR BACK PRESSURE.
3. THOROUGHLY FLUSH LINES PRIOR TO INSTALLATION OF BACKFLOW PREVENTER.
4. IF A PVBA IS INSTALLED INDOORS, CONSIDERATION MUST BE GIVEN TO WATER LEAKAGE IF THE BACKFLOW PREVENTER FAILS (EXCESSIVE WATER SPILLAGE)
5. DO NOT INSTALL IN AN AREA SUBJECT TO FLOODING.
6. MUST BE PROTECTED FROM FREEZING CONDITIONS.
7. THE BACKFLOW ASSEMBLY SHALL BE A STATE APPROVED MODEL.
8. A PLUMBING PERMIT IS REQUIRED– PLEASE CONTACT LOCAL PLUMBING PERMIT CENTER.
9. MUST BE TESTED AFTER INSTALLATION AND YEARLY THEREAFTER BY WASHINGTON STATE CERTIFIED BACKFLOW ASSEMBLY TESTER. TEST RESULTS SHALL BE SENT TO THE CITY OF EDMONDS PUBLIC WORKS.

(ABOVE GROUND INSTALLATION ONLY)

Est. 1890

CITY OF EDMONDS

REVISIONS		STANDARD DETAIL		
APPROVED BY	DATE	PRESSURE VACUUM BREAKER ASSEMBLY (PVBA) 2" AND SMALLER		
		DATE 6/16/03	SCALE NTS	DWG NO. E 7.17

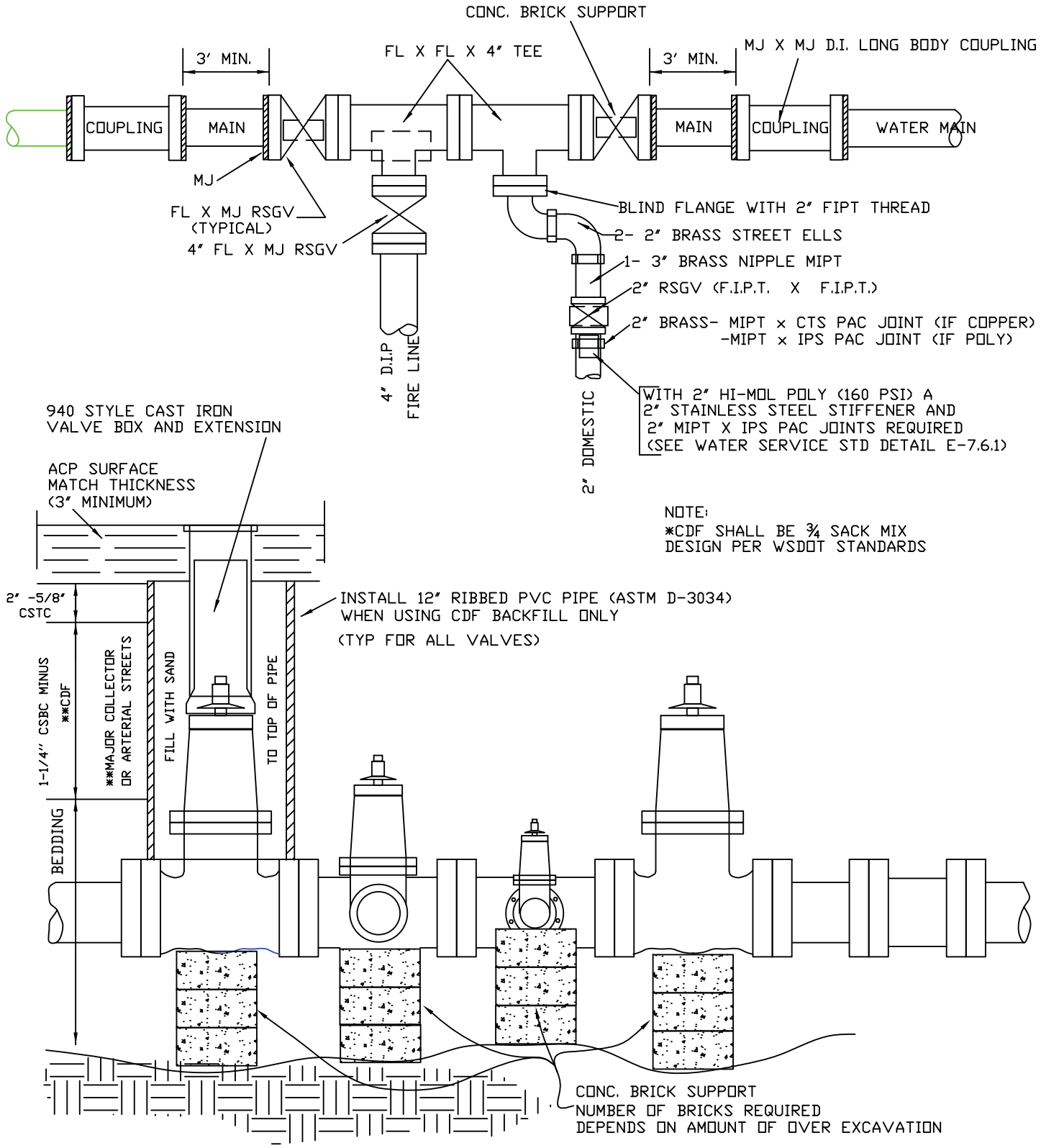

1890–1990

CITY OF EDMONDS

REVISIONS		STANDARD DETAIL		
APPROVED BY	DATE	FIRE LINE AND 2" DOMESTIC SERVICE CONNECTIONS (DETA		
D. GEBERT	4/2/07			
		DATE 07/12/05	SCALE NTS	DWG NO. E7.18

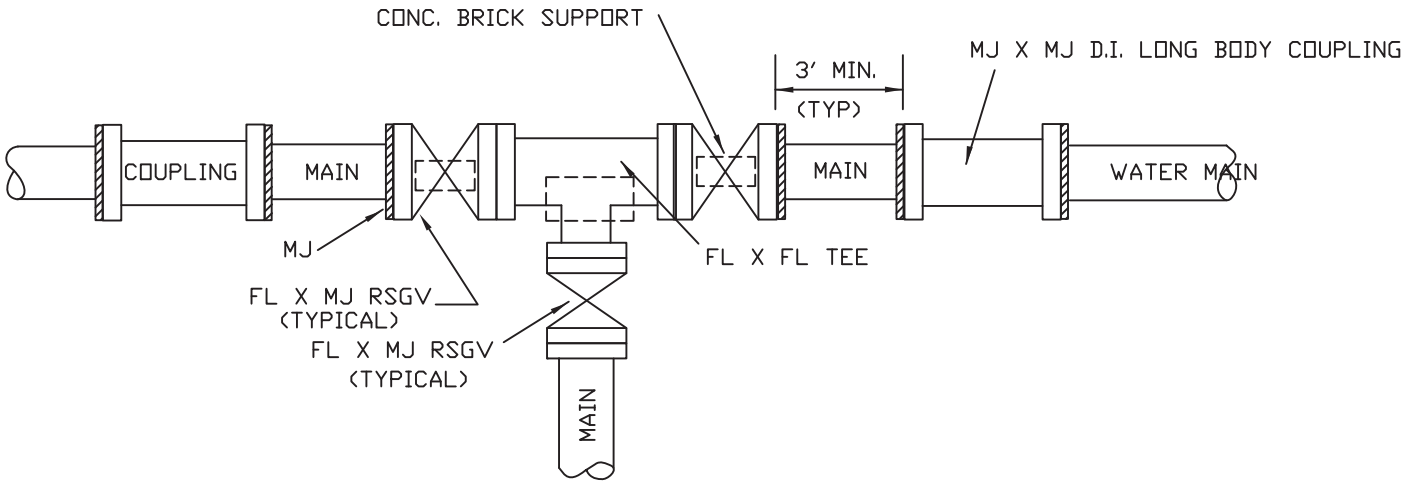

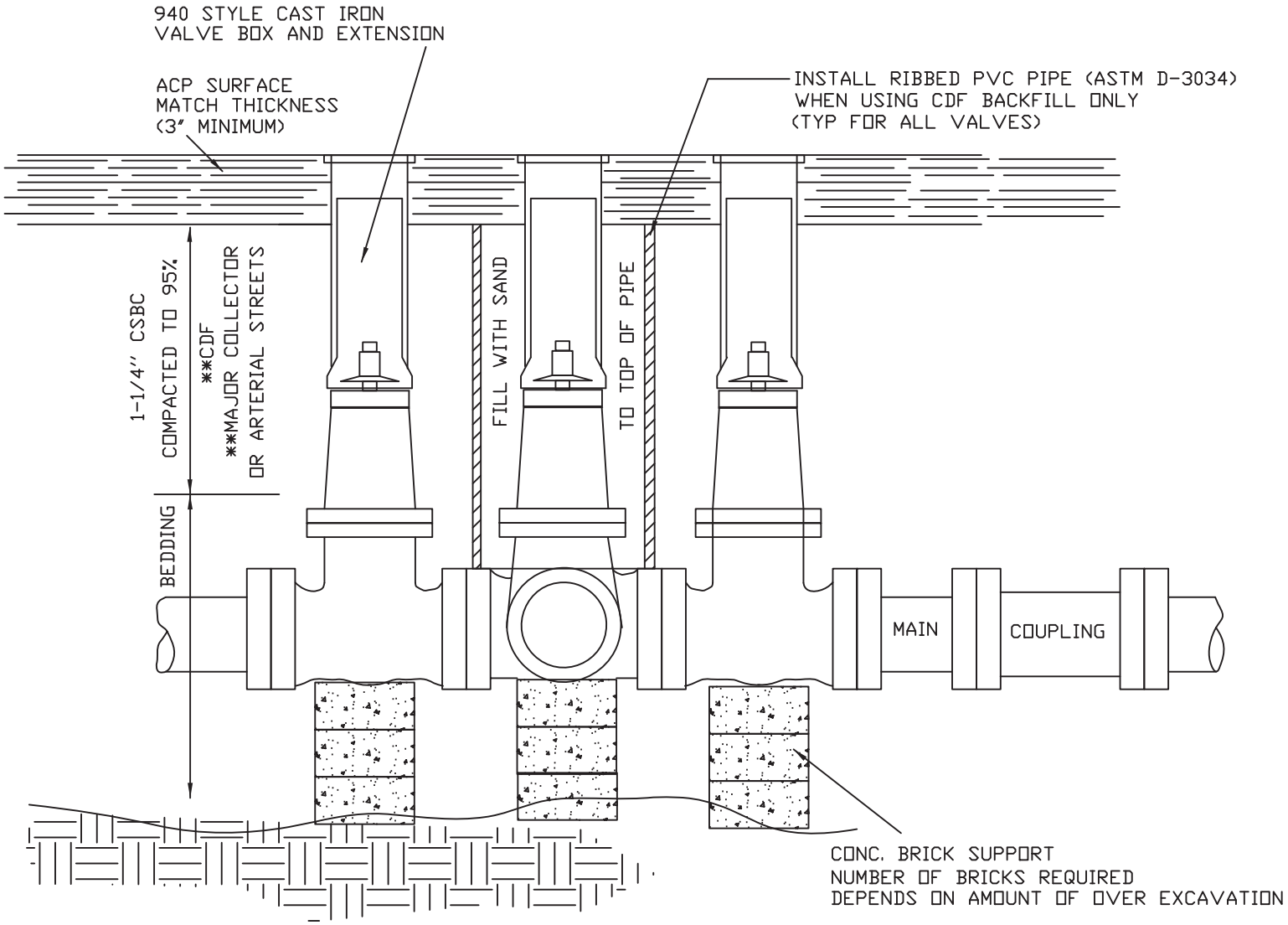

1890–1990

CITY OF EDMONDS

REVISIONS		STANDARD DETAIL		
APPROVED BY	DATE	TYPICAL WATER VALVE CLUSTER CONNECTION DETAIL		
		DATE 8/17/06	SCALE NTS	DWG NO. E7.18.1

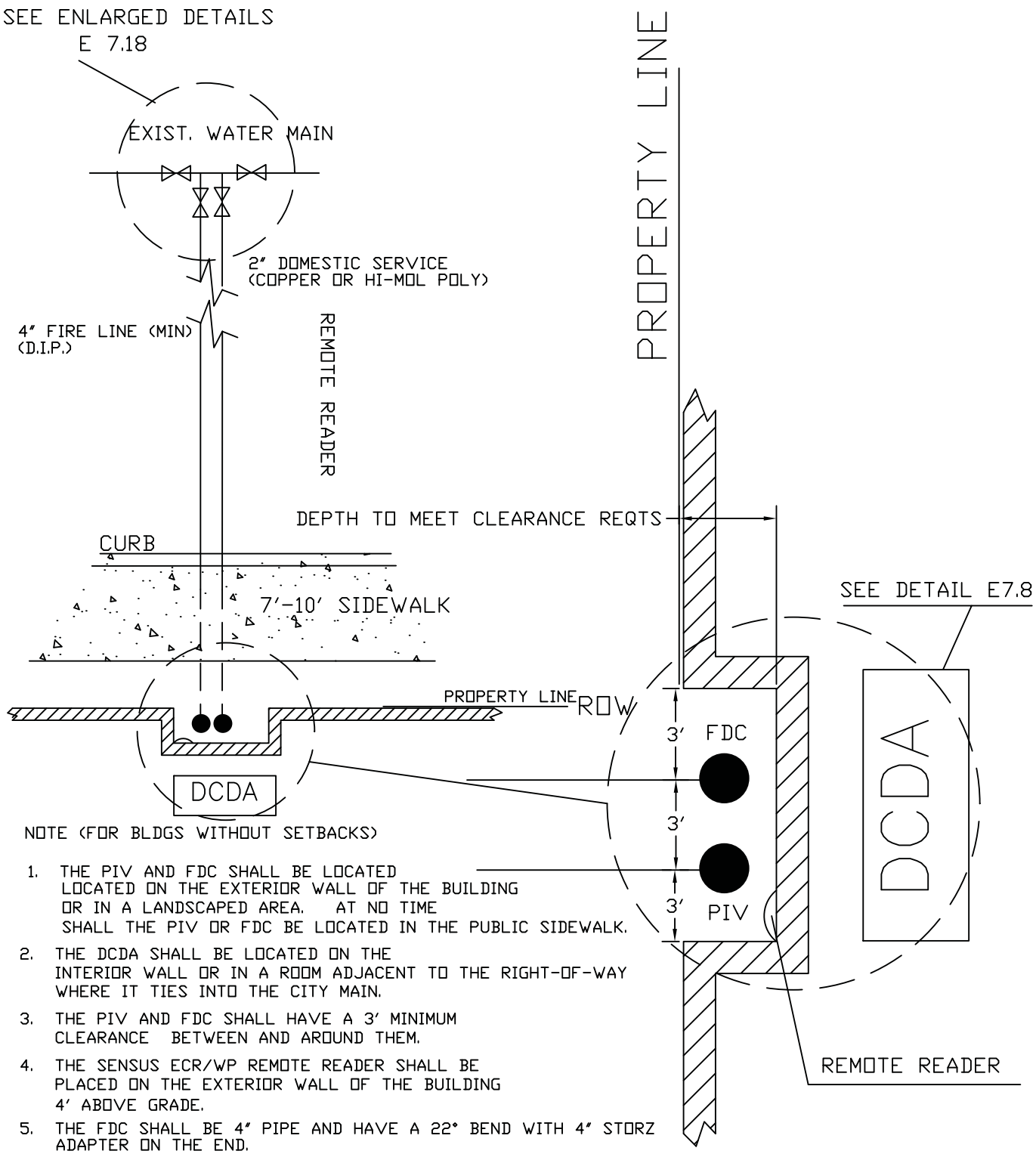

NOTE (FOR BLDGS WITHOUT SETBACKS)

1. THE PIV AND FDC SHALL BE LOCATED LOCATED ON THE EXTERIOR WALL OF THE BUILDING OR IN A LANDSCAPED AREA. AT NO TIME SHALL THE PIV OR FDC BE LOCATED IN THE PUBLIC SIDEWALK.
2. THE DCDA SHALL BE LOCATED ON THE INTERIOR WALL OR IN A ROOM ADJACENT TO THE RIGHT-OF-WAY WHERE IT TIES INTO THE CITY MAIN.
3. THE PIV AND FDC SHALL HAVE A 3' MINIMUM CLEARANCE BETWEEN AND AROUND THEM.
4. THE SENSUS ECR/WP REMOTE READER SHALL BE PLACED ON THE EXTERIOR WALL OF THE BUILDING 4' ABOVE GRADE.
5. THE FDC SHALL BE 4" PIPE AND HAVE A 22° BEND WITH 4" STORZ ADAPTER ON THE END.
6. THE WATER METER SHALL BE LOCATED AT THE PROPERTY LINE WHENEVER POSSIBLE. LOCATION OTHER THAN THE PROPERTY LINE, SHALL BE DETERMINED BY THE CITY INSPECTOR.

1890–1990

CITY OF EDMONDS

REVISIONS	
APPROVED BY	DATE
D. GEBERT	07/12/05
D. GEBERT	4/2/07

STANDARD DETAIL

FIRE LINE AND 2" DOMESTIC SERVICE CONNECTIONS (PLAN VIEW)
ZERO-SETBACK BUSINESS/ COMMERCIAL ZONE

DATE	SCALE	DWG NO.
03/24/05	NTS	E7.19

NOTE (BLDGS WITH SETBACKS)

1. THE DCDA AND VAULT SHALL BE LOCATED ON PRIVATE PROPERTY AND NEXT TO THE RIGHT-OF-WAY LINE.
2. THE PIV AND FDC SHALL BE LOCATED ON PRIVATE PROPERTY AND SHALL BE NEAR THE DCDA.
3. THE PIV AND FDC SHALL HAVE A 3' MINIMUM CLEARANCE BETWEEN AND AROUND THEM.
4. THE FDC SHALL HAVE A 22° BEND WITH 4" STORZ ADAPTER ON THE END.

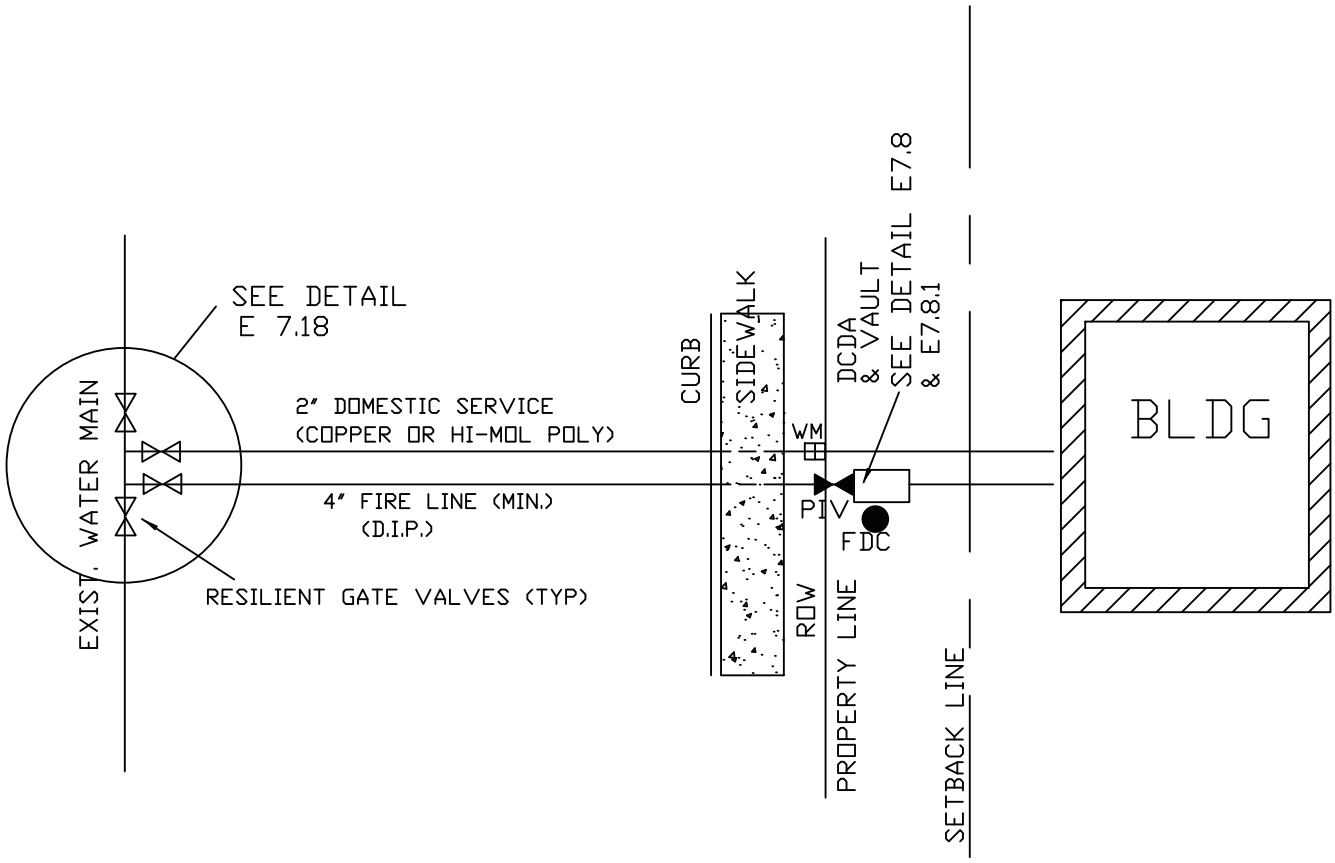

CITY OF EDMONDS

1890–1990

REVISIONS	
APPROVED BY	DATE
D. GEBERT	4/2/07

STANDARD DETAIL

FIRE LINE AND 2" DOMESTIC SERVICE CONNECTIONS (PLAN VIE
ALL ZONES EXCEPT ZERO-SETBACK BUSINESS/ COMMERCIA

DATE	SCALE	DWG NO.
07/12/05	NTS	E7.20

APPENDIX H

THIS PAGE INTENTIONALLY LEFT BLANK

CITY OF EDMONDS
CROSS-CONNECTION CONTROL PROGRAM

1. INTRODUCTION

Congress passed the "Safe Drinking Water Act" with the intent of protecting the public health and welfare of all public water supply users in the United States. The Environmental Protection Agency (EPA) interpreted this mandate to mean that certain contaminants should not be found in water delivered to the water meter or the property line. Thus, these contaminants became the responsibility of the water purveyor (City of Edmonds). The EPA specifically exempted contaminants added to the water under circumstances controlled by the user (except for plumbing corrosion by-products). This was not, however, intended to absolve the purveyor of a responsibility to conduct an aggressive cross connection control program.

As required by the Washington State Department of Health, the City of Edmonds responsibility is to protect the water distribution system from contamination. The greatest public health risk lies in the introduction of a contaminant into the public water supply system because the water distribution system can provide the conduit for the spread of the contaminant to a large population. Cross connections within the customer's plumbing system and within the purveyor's distribution system pose a potential source for the contamination of the public water supply.

Once water leaves the control of the water purveyor (i.e., leaves the distribution system), the water purveyor must consider the possibility that the water could become contaminated. Accordingly, the water purveyor must consider the plumbing systems of all customers to be a potential health hazard. The hazard, and thus the health risk, may vary from minor to severe. The purveyor's cross connection control program should be based on the supposition that all customers should be isolated at the property line (meter) with an approved air gap, unless the purveyor is satisfied with the level of protection provided by the customer. Notwithstanding this basic supposition, the water purveyor should recognize the practical needs of the customer, and the responsibility of other regulatory agencies to protect the customer's plumbing system from becoming contaminated.

The water purveyor's degree of satisfaction in the customer's reduction of their cross connection risk, is a factor in the determination by the purveyor that the purveyor's requirement for premises isolation may be reduced from an approved air gap, to a reduced pressure backflow assembly, double check valve assembly, or no premises isolation.

To protect occupants of the customer's premises, it is necessary to isolate areas of the premises and/or each outlet rather than to install backflow protection at the meter. Generally, the prevention of contamination of a water distribution system or potable water system in a building is of concern to the following:

The water purveyor (City of Edmonds)
The plumbing inspector (City of Edmonds)
The local health inspector (Snohomish County Health District)
The Dept. of Labor & Industries (worker safety regulations)

A Cross connection program may be administered by any or all of the above. To avoid confusion, it is desirable for the water purveyor to have a joint or cooperative program with the other agencies having jurisdiction. Unfortunately, although each has the same overall goal of preventing contamination, each has a different enforcement criteria, authority and responsibility as well as jurisdictional area that may prevent a subordination of its authority to another agency.

The need to eliminate cross connections as a source of potential contamination has been long recognized in plumbing design and plumbing code enforcement. However, plumbing codes handled cross connections only in very general terms. Few details are provided to specify methods of identifying and preventing cross connections. This is because it is impractical to cover in a plumbing code all of the information needed to control cross connections.

The plumbing code addresses the plumbing design and installation in new buildings. Generally, once a building occupancy permit is given, plumbing code jurisdiction effectively ceases until a permit is requested to modify the plumbing system. Changes to a plumbing system are often made without a permit. New equipment may be added. Piping, fixtures and appliances may wear out, malfunction, or be relocated. New cross connections may then be created. Backflow prevention assemblies and devises installed under the plumbing code to protect the public could be removed, bypassed or fail to operate due to the lack of maintenance. For these reasons, it is recommended that a water purveyor not place full reliance on the enforcement of the plumbing code to protect the water distribution system from contamination through cross connections.

The history of cross connection control has provided regulatory authorities with sufficient information to establish a list of those premises where high health hazard cross connections exist, or where the potential hazard is so great that these premises must be isolated from the water purveyor's system. Some states and provinces have established mandatory protection for these premises. However, it is important that each premise be surveyed individually to assess the degree of hazard and what corresponding backflow prevention assembly is required. All premises of the same kind may not require the same type of backflow protection.

Experience has shown that the water purveyor is in a unique position to implement and administer a cross connection control program. The water purveyor has authority to supply water to a customer and to establish standards and remedies for a breach of those standards. The City of Edmonds cross connection control program is needed to effectively deal with all aspects of the public health risk posed by cross connections.

A. Purpose

The purpose of the City of Edmonds (COE) cross-connection control program (CCP) is to protect the public water system from contamination via cross-connection. Ordinance _____ gives the COE the authority to operate the CCP, which meets the requirements of the State of Washington regulation WAC 246-290-490.

B. Policy

The COE will ensure that cross-connections between the distribution system and a customer's premises are eliminated or controlled by the installation of a State of Washington approved backflow preventer that is equal to the degree of hazard. The COE will operate a combination program whereby premises isolation requires backflow protection with an Air Gap (AG) or a Reduced Pressure Backflow Assembly (RPBA). In-premises isolation backflow protection (within the customer's property lines) will be permitted if there is no high health hazard and the CCS coordinates with the Local Administrative Authority (LAA).

The final building construction approval and occupancy shall not be granted by the Local Administrative Authority until final cross-connection compliance is determined by site inspection performed by the Cross-Connection Control Specialist.

The customer is responsible for the expense to protect the public water system from backflow contamination by installing, maintaining and testing backflow assemblies in accordance with the COE Cross-Connection Program (Section 3). Failure of the customer to cooperate in the installation, maintenance, repair, inspection or testing of backflow prevention assemblies required by COE shall be grounds for termination of water service to the premises.

In the event the water purveyor must initiate action to enforce compliance with the Ordinance on this program, all costs incurred enforcing the action shall be borne by the property owner/business owner.

The COE will refer to the Pacific Northwest Section AWWA Cross-Connection Control Manual Accepted Procedure and Practice most current edition and the current Manual of Cross-Connection Control (USC Manual) on issues concerning cross-connection control.

The COE will ensure that at least one person certified as a Cross-Connection Specialist (CCS) is provided to develop and implement the cross-connection control program. Responsibilities include:

1. Administer the Cross-Connection Control Program (CCP).
2. Evaluate service connection for backflow hazards.
3. Reporting on the annual progress of the CCP.
4. Public Education.
5. Investigate water quality concerns where backflow is suspected.
6. Keep current records of all backflow preventer testing, air gaps installed in-lieu of approved backflow preventers, test kit calibration, and tester certification.
7. Responsible to eliminate or control cross-connections between the distribution system and the customer's premises.
8. Ensure quality control for backflow testing.
9. Inspect tank trucks and issue Hydrant Use Permits.
10. Complete Backflow Incident Response Forms and inform DOH, Snohomish County Health District, and the LAA of incidents involving contamination to the pubic water system.
11. Investigate all water quality complaints.
12. Review commercial and multifamily construction plans, city business license applications and any other means to identify the need for cross-connection control.

C. Responsibilities

The COE will not be responsible for any loss or damage caused by any negligence or wrongful act of a customer or his authorized representative in installing, maintaining, operating or using any and/or all appliances, facilities, or equipment for which water service is supplied. The customer will be held responsible for damage to COE facilities and other property resulting from the use and operation of appliances and facilities on the customer's premises, including damage caused by steam, hot water, chemical, etc.

Chapter 7.20
BACKFLOW PREVENTION

Sections:

7.20.010 Definitions.
7.20.020 Cross-connections declared unlawful.
7.20.030 Backflow prevention devices to be installed.
7.20.040 Private water supply systems.
7.20.050 Adoption of state regulations.
7.20.060 Abatement of unlawful cross-connections and installation of backflow prevention devices – Procedures.
7.20.070 Penalties.

7.20.010 Definitions.

A. “Backflow” means a flow, other than the intended direction of flow, of any foreign liquids, gases, or substances into the distribution system of a public water supply.

B. “Backflow prevention device” means a device approved by the state of Washington, Department of Social and Health Services or such other state department as has jurisdiction over the subject matter and by the American Water Works Association, used to counteract back pressure or prevent back siphonage into the distribution system of a public water supply.

C. “Cross-connection” means any physical arrangement whereby a public water supply is connected, directly or indirectly, with any other water supply system, sewer, drain, conduit, pool, storage reservoir, plumbing fixture or other device which contains or may contain contaminated water, sewage or other wastes or liquids of unknown or unsafe quality, which may be capable of imparting contamination to a public water supply as a result of backflow. [Ord. 1711 § 1, 1974].

7.20.020 Cross-connections declared unlawful.

The installation or maintenance of a cross-connection, which, in the opinion of the director of public works or his designee, will endanger the water quality of the potable water supply of the city of Edmonds, is unlawful. [Ord. 1711 § 1, 1974].

7.20.030 Backflow prevention devices to be installed.

Backflow prevention devices, when required to be installed in the opinion of the director of public works or his designated representative, shall be installed and maintained by the service customer on any service connection to the city of Edmonds water supply system where the backflow prevention devices are necessary for the protection of the city of Edmonds' water supply. [Ord. 1711 § 1, 1974].

7.20.040 Private water supply systems.

Use or operation of a private water supply system, contrary to the provisions of the ordinances of the city of Edmonds, or the laws of the state of Washington or the rules and regulations of the State Board of Health regarding public water supplies where the private system is served by the city public water supply is unlawful. [Ord. 1711 § 1, 1974].

7.20.050 Adoption of state regulations.

The community services director or his/her designee is hereby authorized to develop rules and regulations based upon and including the requirements of the rules and regulations of the State Board of Health regarding public water supplies and the protection of such supplies from contamination entitled “Cross-Connection Control Regulations in Washington State,” the provisions of WAC 246-290-490, and the American Waterworks Association, Pacific Northwest

Second Edition of “Accepted Procedure and Practice in Cross-Connection Manual.” The provisions of the Washington Administrative Code, the rules and regulations of the Department of Health set forth in the Cross-Connection Control Regulations in Washington State and the previously referenced Accepted Procedure and Practice in Cross-Connection Manual are hereby adopted by this reference as fully as if herein set forth in full. Any additional rules and procedures necessary to implement such regulations shall be developed by the community services director or his/her designee as appropriate. Such rules and regulations shall be kept on file along with copies of the above referenced regulations and manuals in the office of the city engineer of the city of Edmonds. [Ord. 2956 § 1, 1993; Ord. 1711 § 1, 1974].

7.20.060 Abatement of unlawful cross-connections and installation of backflow prevention devices – Procedures.

Cross-connections declared in this chapter to be unlawful whether presently existing or hereinafter installed and/or services requiring backflow prevention devices and/or unlawful use or operation of a private water supply system served by the city public water supply are public nuisances and, in addition to any other provisions of this code or the ordinances of the city of Edmonds on abatement of public nuisances, shall be subject to abatement in accordance with the following procedure:

A. In the event that the director of public works or his designee determines that a nuisance as herein provided does exist, written notice shall be sent to the person in whose name the water service is established under the records of the city of Edmonds water division, or alternatively, a copy of such written notice shall be posted on the premises served.

B. The notice shall provide that the nuisance described herein shall be corrected within 30 days of the date the notice is mailed or posted on the premises.

C. In the event the nuisance is not abated within the prescribed time, water service to the premises shall be discontinued.

D. In the event that the nuisance, in the opinion of the director of public works or his designated representative, presents an immediate danger of contamination to the public water supply, service from the city water supply system to the premises may be terminated without prior notice; provided, however, notice will be posted on the premises in the manner heretofore provided at the time the service is terminated. [Ord. 1711 § 1, 1974].

7.20.070 Penalties.

In addition to the remedies set forth herein, any person found guilty of violating any of the provisions of this chapter shall be subject to the penalties as set forth in ECC 5.50.020. [Ord. 1711 § 1, 1974].

TOC < >

www.ci.edmonds.wa.us

Code Publishing Company
Voice: (206) 527-6831
Fax: (206) 527-8411
Email: CPC@codepublishing.com

City of Edmonds

Water Production and Distribution

Cross-Connection and Backflow

What is a Cross-Connection?

A cross connection is any actual or potential physical connection between a “potable water” line and any pipe, vessel, or machine containing non-potable fluid, solid or gas allowing possible entry to the water system by backflow. This would include, but is not limited to, sewers, drains, conduits, pools, storage reservoirs, plumbing fixtures, or any other device. The non-potable or unproved water supply system may contain contaminated liquids, solids, or gases, of unknown or unsafe quality. Bypass arrangements such as jumper connections, removable sections, swivel or changeover devices are considered to be a cross connection.

What is Backflow?

Backflow is a flow in reverse from the normal direction of flow in a piping system. It occurs due to a differential pressure existing between two different points within a continuous fluid system: a fluid of higher pressures flowing to a fluid of lower pressure. Backflow may occur due to either “backsiphonage” or “backpressure.”

Irrigation Systems

If you have or are planning on installing an irrigation system, you must first comply with Washington State Law (WAC 245-290), and the City of Edmonds Ordinance Chapter 7-20. These Laws require that **all irrigation systems have approved backflow protection.** A plumbing permit is also required when installing an irrigation system.

Without proper backflow protection, your irrigation system could endanger the health of your family, neighbors, and others in the community who are using the public water system.

The following state approved backflow assemblies are required to be installed per the City of Edmonds Standards, and must be tested by a Washington State Certified Backflow Assembly Tester upon installation, repairs, relocation, and annually thereafter:

- Pressure Vacuum Breaker Assemblies (PVBA)
- Double Check Valve Assemblies (DCVA)
- Reduced Pressure Backflow Assemblies (RPBA)

The atmospheric vacuum breaker is the only backflow prevention device that does not require annual testing.

Improper installations of a State Approved Backflow Prevention Assembly or failure to have the backflow prevention assembly tested are grounds for termination of the water service.

On-site water wells

If you have an on-site well and would like the City of Edmonds water service, you must first comply to Washington State Law (WAC 173-160 and WAC 246-290), and the City of Edmonds Ordinance (Chapter 7-20), before the city can install the water service.

- **Installation of a State Approved Reduced Pressure Backflow Assembly:** If you elect to keep your well, you will need to install a State Approved Reduced Pressure Principle Backflow Assembly (RPBA) per City of Edmonds Standards above must be completed before the water can be turned on.
- **Abandonment of Your Well:** If you elect to abandon your well, it must be properly abandoned using a licensed well driller. The licensed well driller will abandon the well per Washington State Law (WAC 173-160).

Capping the well or pulling the pump is NOT proper abandonment; therefore the installation of a State Approve Reduced Pressure Backflow Prevention Assembly is required.

Improper installation of the State Approved Backflow Prevention Assembly or the improper abandonment of the well is grounds for termination of the water service.

If you have any questions concerning backflow installations, certified testers, or approved backflow prevention assembly, please call the Public Works Department at 425-771-0235, extension 1644 or by email mcmurphy@ci.edmonds.wa.us .

APPENDIX I

THIS PAGE INTENTIONALLY LEFT BLANK

City of Edmonds Fire Code Chapter 19.25

An update to the City of Edmonds Fire Code is underway at the time of the Comprehensive Water System Plan update in 2010. The updated code will replace the current code that follows, upon approval by the City Council.

Chapter 19.25
FIRE CODE

Sections:

19.25.000 Adoption of life safety and maintenance codes.
19.25.005 Section amendments.
19.25.010 Department of fire prevention.
19.25.015 Definitions.
19.25.020 Permits.
19.25.025 Charges for water mains and hydrants.
19.25.030 Charges for fire review and inspection.
19.25.035 Fire extinguishers and systems service.
19.25.040 Automatic sprinkler systems.
19.25.045 Modifications, interpretations and appeals.
19.25.050 Fire protection water supplies.
19.25.055 Location of public hydrants.
19.25.060 Location of private hydrants.
19.25.065 Mains and service lines.
19.25.070 Hydrant specifications.
19.25.075 Penalties.

19.25.000 Adoption of life safety and maintenance codes.
Under the statutory authority of RCW 19.27.031 and 19.27.074, the 2006 Edition of the International Fire Code (IFC) as published by the International Code Council including the state amendments set forth in Chapter 51-54 WAC, including reference standards of the National Fire Protection Association and the following Appendices: B (Fire-Flow Requirements for Buildings), C (Fire Hydrant Locations and Distribution), E (Hazard Categories) and F (Hazard Ranking) are adopted by reference as if fully set forth as the fire code of the city of Edmonds. The International Existing Building Code is not adopted and all references to that code shall be disregarded. [Ord. 3651 § 1, 2007].

19.25.005 Section amendments.
The following sections of the IFC have been added, amended, deleted or replaced as follows:

A. Chapter 1, Administration.

1. Section 104.10.1 Assistance from other agencies. Police and other enforcement agencies shall have authority to render necessary assistance in the investigation of fires and enforcement of the life safety provisions of this code when requested to do so by the fire code official.

2. Section 104.11.2 Obstructing operations. No person shall obstruct the operations of the fire department in connection with extinguishment control or investigation of any fire, or actions relative to other emergencies, or disobey any lawful command of the fire chief or officer of the fire department in charge of the emergency, or any part thereof, or any lawful order of a police officer assisting the fire department.

3. Section 108 Board of appeals. Replaced by Chapter 19.80 ECDC.

B. Chapter 5, Fire Service Features (Fire Apparatus Access Roads). The following sections are adopted as originally set forth in the IFC:

1. Section 503.1 Where required.

2. Section 503.1.1 Buildings and facilities.

3. Section 503.1.2 Additional access.

4. Section 503.1.3 High-piled storage.

5. Section 503.2 Specifications.

6. Section 503.3 Marking.

7. Section 503.4 Obstruction of fire apparatus access roads.

C. Chapter 9, Fire Protection Systems.

1. Section 901.6.1 Standards. Fire protection systems shall be inspected, tested and maintained in accordance with the referenced standards listed in Table 901.6.1 and this chapter. For the sole purpose of inspecting, testing and maintenance of water-based fire protection systems in accordance with NFPA 25, all existing water-based fire protection systems shall be considered new as of July 1, 2004.

2. Section 904.11.7 Existing commercial cooking systems. Existing fire suppression systems not in compliance with Underwriters Laboratory Standard 300 shall be replaced with a conforming system by July 1, 2005.

D. Chapter 33, Explosives and Fireworks.

1. Section 3301.1.3 Fireworks. Exceptions No. 3 and No. 4 replaced by Chapter 5.27 ECC.

[Ord. 3651 § 1, 2007].

19.25.010 Department of fire prevention.
A. There is established in the city fire department a department of fire prevention, to be supervised by the fire code official.

B. The IFC shall be enforced by the department of fire prevention.

C. The fire code official shall be the fire marshal who shall be in charge of the department of fire prevention and who shall be appointed by the mayor on the basis of applicable civil service rules and regulations for the city.

D. The fire marshal may recommend to the fire chief the employment of technical officers, inspectors and other employees. If approved, technical officers and inspectors shall be hired or assigned for that purpose.

E. An annual report shall be provided to the mayor. It shall contain all proceedings under this code, with other statistics as the fire marshal of the city fire department may wish to include. The fire marshal may also recommend any changes to the code. [Ord. 3651 § 1, 2007].

19.25.015 Definitions.
A. Whenever the term “fire code official” is used in the IFC, it shall mean the fire marshal.

B. Whenever the term “chief administrative officer” or “fire chief” is used in the IFC, it shall mean the fire chief.

C. Whenever the term “legal representative of the jurisdiction” is used in the IFC, it shall mean the city attorney.

D. Whenever the word “jurisdiction” is used in the IFC, it shall mean the city of Edmonds. [Ord. 3651 § 1, 2007].

19.25.020 Permits.
A. Whenever the IFC requires a permit, the application for the permit shall be accompanied by the full application fee in order to vest rights under the permit and to constitute a complete permit application. The permit fee shall be set by the city council annually by resolution or on such review cycle as the council, in its discretion, shall determine. All permits shall be renewed annually unless the specific time period is set forth when the permit is granted. No permit shall be transferable and each permit shall be issued on a single job, transaction, owner, or occupancy basis, except that the fire marshal is authorized to consolidate permits for a single location, building, or unit.

B. In the event that the activity, location or risk associated with the activity requires a fire safety inspection in excess of the time estimated within the permit fee (one hour) an inspection fee equal to the actual cost to the city of providing the inspection shall be charged pursuant to ECDC 19.25.030.

C. The following activities regulated pursuant to the IFC shall not require a permit to be issued under this section. Nothing herein shall be interpreted, however, to exempt these activities from other permits or licenses required by law or ordinance. The accepted activities are:

1. Carnivals and fairs;

2. Open flames and candles;

3. Open burning (see ECC 5.22.030);

4. Fire hydrants and water control valves;

5. Private fire hydrants;

6. Roof-top heliports;

7. Waste handling. [Ord. 3705 § 1, 2008; Ord. 3651 § 1, 2007].

19.25.025 Charges for water mains and hydrants.
A. Water main replacement to city standards, plans and specifications will be accomplished by the city in accordance with the city's water comprehensive plan and adopted capital improvement program. For private development, owners shall be responsible for the replacement (upgrade) of the existing public main (including fire hydrants and appurtenances) to city standard when identified by the city engineer as a condition of development approval. The city will pay the difference in material costs only between six inches and the size that is required to be installed only when the existing system is a looped system.

B. A hydrant use permit issued by the public works director is required in order for any person or entity other than fire department personnel to draw water from any fire hydrant.

C. The installation of water mains, fire hydrants and appurtenances to properties not previously served shall be sized in accordance with the city's water comprehensive plan, built to city standard and shall be at the benefited property owner's or developer's expense.

D. Oversized water mains required for special use demands relating to a particular property or development shall be installed at the developer's or property owner's expense.

E. If the water mains installed pursuant to subsections (C) and (D) of this section provide service or benefits to properties other than owned by the water main installer, latecomer agreements may be arranged between the city and the installer for the construction and dedication of the water facilities pursuant to the provisions of Chapter 35.91 RCW. [Ord. 3651 § 1, 2007].

19.25.030 Charges for fire review and inspection.
A. Certain licenses and permits issued by the city include a fire department inspection. The cost of the

permit may include an estimate of the normal time associated with the fire inspection. Where the permit does not include such an estimate, or when the estimate of time established within the ordinance is exceeded by the actual time spent inspecting a premises, location or activity, the actual cost of conducting the inspection shall be charged. The administrative services director is authorized to establish on an annual basis, in conjunction with or immediately following the budget process, a fee for the hourly charge associated with the provision of services by reasonable classifications of city employees.

B. The permittee shall pay the actual charges of inspection, in addition to the permit fee associated with such activity. Licenses and permits requiring the actual payment of inspection charges include, but are not limited to, public amusement licenses issued pursuant to Chapter 4.32 ECC, cabaret dance licenses issued pursuant to Chapter 4.48 ECC, adult entertainment facility licenses issued pursuant to Chapter 4.52 ECC, and aircraft landing licenses issued pursuant to Chapter 4.80 ECC.

C. No charge shall be levied against any department or agency of the city of Edmonds operating within the city's general fund. [Ord. 3651 § 1, 2007].

19.25.035 Fire extinguishers and systems service.
A. A permit or a current license/certification by an approved testing authority shall be required for the servicing of fire extinguishers and fire extinguishing systems.

B. Applicants for a permit to service fire extinguishers and fire extinguishing systems shall be required to take and pass an examination to be established by the fire marshal. Permit fees are set forth in Chapter 19.70 ECDC. If the permit is not issued, because the examination is not held or the applicant fails to complete the examination, a refund of the permit fee will be made to the applicant.

C. Service permits shall be issued by the fire marshal. The permit may be revoked at any time the permittee fails to comply with city, state or federal regulations. The permit is not transferable and shall be void if the permit holder changes business address or employers.

D. The permit shall expire after five years. The permittee shall then obtain a new permit if he wishes to continue servicing fire extinguishers or fire extinguishing systems.

E. The fire marshal may waive permit requirements for applicant when provided with proof of current license or current certification by an approved testing authority. The fire marshal may, as often as necessary, inquire with licensing authority regarding licensing and certification testing methods, requirements and dates of effectiveness, prior to approval for work performed.

F. A certificate of inspection for every system test, maintenance, activation and repair shall be forwarded to the fire marshal upon completion of service. One copy of that record shall be maintained on the premises.

G. Appeals regarding the administration of the fire extinguisher and fire-extinguishing system service permit and license approval process shall file their appeal with the fire chief and be heard before the board of appeals pursuant to Chapter 19.80 ECDC. [Ord. 3651 § 1, 2007].

19.25.040 Automatic sprinkler systems.
An automatic sprinkler system shall be installed and maintained throughout every building constructed under the International Residential Code containing five or more attached dwelling units. Residential or quick response standard sprinkler heads shall be used in accordance with their approved listing in the dwelling. [Ord. 3651 § 1, 2007].

19.25.045 Modifications, interpretations and appeals.
A. The fire marshal may modify any of the provisions of the IFC or this chapter on written application by the owner or lessee when there are practical difficulties in carrying out the strict letter of the code. Approved modifications, including alternative materials and methods, shall observe the spirit of the code, secure the public safety and do substantial justice. The particulars of an approved modification shall be

written by the fire marshal and kept in the records of the department. A signed copy shall be promptly given to the applicant.

B. Fire department modifications and code interpretations shall be maintained in writing so as to aid in conformance and uniform application to the intent of ruling fire and life safety related codes, ordinances, and standards.

C. Whenever the fire marshal disapproves an application or refuses to grant a permit applied for, or when it is claimed that the provisions of the code do not apply or that the true intent and meaning of the code have been misconstrued or wrongly interpreted, the applicant may appeal from the decision of the fire marshal to the fire chief. Such appeals shall be governed by the procedures set forth in Chapter 19.80 ECDC. [Ord. 3651 § 1, 2007].

19.25.050 Fire protection water supplies.
All fire hydrant, water main and appurtenance installations shall meet the provisions of this chapter as well as other applicable plans, standards and codes adopted by the city of Edmonds, as a condition of approval of subdivisions and building permits. [Ord. 3651 § 1, 2007].

19.25.055 Location of public hydrants.
A. Public hydrants are those owned by the city.

B. All public fire hydrants shall be installed at street intersections where possible. Public hydrant spacing shall be measured along vehicle access routes.

C. In areas zoned for single-family residential use, public hydrants shall be spaced no more than 600 feet apart. If dead-end streets, or driveways, singly or in combination, are over 300 feet long, additional public hydrants shall be installed so that the public hydrant spacing is not over 600 feet.

D. In areas other than single-family residential, public fire hydrants shall be spaced an average of 300 feet apart. If dead-end streets or driveways, singly or in combination, are over 150 feet long, additional public hydrants shall be installed so that the public hydrant spacing is not over 300 feet. [Ord. 3651 § 1, 2007].

19.25.060 Location of private hydrants.
A. A private hydrant is privately owned, but is subject to the use of the city for inspection and testing at reasonable times, and for fire suppression at any time. All private hydrants shall be connected to the city water main through a privately owned and maintained double detector check valve assembly.

B. All buildings except single-family dwellings that are located so that a portion is more than 200 feet from a street, as measured along vehicle access routes, shall have private fire hydrants located at the building. Single-family dwellings with a fire-flow calculation area greater than 4,800 square feet may require a private hydrant.

C. Buildings having required fire flows of 3,000 gallons per minute may have fire hydrants on one side of the building only. There shall never be fewer than two fire hydrants for any building larger than 5,000 square feet in the first floor area including covered parking and storage. When the required fire flow is 3,000 gallons per minute or greater, the fire hydrants shall be served by a looped main around the building or complex of buildings.

D. Fire hydrants shall be spaced on an average 300 feet around the perimeter line, 50 feet out of the buildings. All hydrants shall be placed in locations accessible to fire department vehicles adjacent to fire apparatus access roads. The fire marshal shall determine the location of fire hydrants depending on utility, topography and building location for maximum fire protection. [Ord. 3651 § 1, 2007].

19.25.065 Mains and service lines.
A. All public hydrants in single-family areas shall be supplied by not less than six-inch looped water mains.

All hydrants in areas other than single-family residential shall be supplied by not less than eight-inch looped water mains. Dead-end water mains to hydrants shall be at least eight inches in diameter, with the exception of mains up to 50 feet long which may be no less than six inches in diameter.

B. The service line from the water main to the hydrant shall be no less than six inches in diameter. Any service lines over 50 feet in length from water main to hydrant shall be no less than eight inches in diameter.

C. When city streets, or state highways having water mains in the public right-of-way, are improved to permanent street or highway improvement standards, any water mains in the public right-of-way of said streets or highways that are substandard as to size or material according to applicable city standards shall be replaced with ductile iron water mains conforming to applicable city standards and plans. [Ord. 3651 § 1, 2007].

19.25.070 Hydrant specifications.
A. The installation of flush type hydrants (hydrants entirely below grade) is prohibited.

B. Fire hydrants shall have two two-and-one-half-inch hose outlets and one four-and-one-half-inch pumper outlet. All outlets' ports shall have national standard thread. Additionally, the pumper outlet shall be provided with a four-inch Storz adapter. Fire hydrants shall meet the American Water Works Association, Standard No. C-502 and current city standards.

C. Fire hydrants and appurtenances shall be installed in accordance with generally accepted engineering practices and city standards, and to the approval of the city engineer, who shall also approve the selection and use of all pipe fittings and valves. There shall be a foot valve installed between the service main and the hydrant sufficient to permit the repair and replacement of the hydrant without disruption of water service. The foot valve shall be installed to city standards. The location of all such valves installed shall be properly and accurately marked on as-built plans or drawings with generally acceptable engineering detail, two copies of which shall be furnished to the public works department. Valves shall be furnished with a standard valve box.

D. Hydrants shall stand plumb, be set to established street grade with the lowest outlet of the hydrant at least 18 inches above the adjacent finished grade and at least 36 inches of clear area around the hydrant for clearance of hydrant wrench on both outlets and on the control valve. The pumper port shall face the street, as determined by the fire marshal.

E. Where reasonably necessary to protect a hydrant from damage, the fire marshal may require hydrants to be protected by two or more posts, eight inches in diameter by five feet long, made either of reinforced concrete or steel.

F. If there presently exist fire hydrants which do not conform to these requirements, they shall be replaced with conforming hydrants upon redevelopment or the timetable established by the city's comprehensive plan.

G. No person shall plant any vegetation, erect any structure or perform any action which results in the obstruction of a fire hydrant for a distance of 50 feet along the immediate route of approach. The owner-occupant of any area in which a hydrant is located shall be responsible for removing weed and tree growth from around the hydrant for a distance of not less than five feet. The purpose of this section is to maintain clear approach and visual area around the hydrant.

H. The installation of the fire hydrants and mains may be accomplished by city capital contract, developers (as a condition of development) or public works department employees. All installations are to be approved by the city engineer.

I. Following the installation of fire hydrants, all pipes, valves and hydrants shall be pressure tested, purified, flushed and sampled to meet the requirements of the American Water Works Association,

Standard No. C-502. [Ord. 3651 § 1, 2007].

19.25.075 Penalties.

A. Any person who violates any of the provisions of the IFC including those standards of the National Fire Protection Association specifically referenced in the IFC as adopted and amended herein or fails to comply therewith, or who violates or fails to comply with any order made thereunder, or who builds in violation of any detailed statement of specifications or plans submitted and approved thereunder, and from which no appeal has been taken, or who fails to comply with such an order as affirmed or modified by decision of the city's board of appeals or by a court of competent jurisdiction, within the required time, shall severally for each and every such violation and noncompliance, respectively, be guilty of a gross misdemeanor, punishable as provided in ECC 5.50.020.

B. The imposition of one penalty for any violation shall not excuse the violation nor permit it to continue; and all such persons shall be required to correct or remedy such violations or defects within a reasonable time; and when not otherwise specified, each day that prohibited conditions exist or are maintained shall constitute a separate offense. The application of the above penalty shall not be held to prevent the enforced removal of prohibited conditions. [Ord. 3651 § 1, 2007].

This page of the Edmonds City Code is current through Ord. 3773, passed December 15, 2009.
Disclaimer: The City Clerk's Office has the official version of the Edmonds City. Users should contact the City Clerk's Office for ordinances passed subsequent to the ordinance cited above.

City Website: http://www.ci.edmonds.wa.us (http://www.ci.edmonds.wa.us)
City Telephone: (425) 771-0245
Code Publishing Company (http://www.codepublishing.com/)

APPENDIX J

THIS PAGE INTENTIONALLY LEFT BLANK

City of Edmonds
Public Works Department
7110 - 210th St. S.W.
Edmonds, Washington 98026

POSTAL CUSTOMER

ECRWSS

PRESORTED
STANDARD
US POSTAGE
PAID
LYNNWOOD, WA
PERMIT NO 1036

2010

Annual Water Quality Report

This report contains information about your drinking water, required by the Environmental Protection Agency (EPA)

The bottom line is this: Our water is safe to drink. Our water quality meets or exceeds state and federal standards.

Edmonds Water Source: Where our drinking water comes from

Along with most residents within the City of Edmonds, you receive your water from Everett's Spada Reservoir in the Sultan Basin. Our water source is disinfected with chlorine, which destroys Giardia, bacteria and viruses that may be present in the source water. Our water source also adds fluoride to prevent tooth decay.

Everett Water Source

The Sultan Basin watershed, which fills Spada Reservoir, is protected and patrolled regularly. This watershed receives more than 160 inches of rain each year. Water from Spada Reservoir is routed by pipe to Chaplian Reservoir. There, this pristine high quality mountain water is treated at the City of Everett's filtration plant before being distributed for consumption. From the source, the greatest care is taken to ensure that the water you use meets federal and state requirements as well as Everett's own high local standards.

Along the way for distribution, the water is tested frequently for microbiological and chemical quality to ensure you receive safe water each time you use your faucet. The City of Everett provides this water for their own customers and numerous other water utilities. The City of Edmonds purchases Everett's water through Alderwood Water District, Alderwood Water District also supplies several other water utilities within Snohomish county.

Edmonds Distribution system:

Within the City of Edmonds distribution system, there are three 1.5 million gallon and one 3.0 million gallon reservoirs.

2009 Water Quality Monitoring

The 2009 water quality monitoring results listed in the following table show that there were no contaminants at or above the allowable levels. The sources of all drinking water (both tap water and bottled water) include rivers, lakes, streams, ponds, reservoirs, springs and wells. As water travels over the surface of the land or through the ground, it dissolves naturally occurring minerals, which can be vulnerable to contamination. In both of Edmonds water supplies, these potential contaminants and their sources include:

- Microbial contaminants, such as viruses and bacteria, from wildlife;
- Inorganic contaminants, such as salts and metals, which are naturally occurring, and;
- Organic contaminants, which are by-products of the water chlorinataing processes.

Drinking Water Treatment Notice

On Tuesday, Sept. 1, the City of Everett drinking water treatment plant exceeded the maximum filter flow rate approved by the State Department of Health. The incident occurred while a study was being conducted to determine the hydraulic characteristics of a new water storage facility at the plant. Water was allowed to flow through several filters above state authorized rates for approximately one hour, increasing the risk that insufficiently treated water could have entered the water system. During the event, filtered water quality remained in compliance with all drinking water standards. The State Department of Health determined there was no significant threat to public health and that a public health advisory was not needed. State and federal regulations require that a statement regarding this violation be included in this report along with the following mandatory language: *"Inadequately treated water may contain disease-causing organisms. These organisms include bacteria, viruses, and parasites that can cause symptoms such as nausea, cramps, diarrhea, and associated headaches."*

Managing the Distribution System

A key to maintaining good water quality is effectively managing the water distribution system. It is important for water to remain fresh and retain sufficient chlorine for disinfection. The City has a flushing program and also has a cross-connection control program designed to keep contaminants from homes and businesses from entering the potable water system.

CITY OF EDMONDS

2009 WATER QUALITY DATA

Parameter	Units	EPA's Allowable Limits		Alderwood Water		Typical Sources	Comply
		MCLG	MCL OTHER	RANGE OR OTHER	AVERAGE		
Fluoride	ppm	2	4	0.78 - 1.1	0.94	Dental additive	Yes
Nitrate	ppm	10	10	0.049 - 0.120	0.087	Erosion from natural deposits	Yes
% of positive samples for Total Coliform	%	0	5% per month	0	0	Naturally present in the environment	Yes
Microbial Parameters (Measured in Edmonds Distribution System)							
% of positive samples for Total Coliform	%	0	5% per month	0	0	Naturally present in the environment	Yes
Turbidity, inorganics, and Microbial Contaminants							
Turbidity	NTU	N/A	TT	100%	0.08	Soil Erosion	Yes

Turbidity is a measure of the amount of particulates in water measured in Nephelometric Turbidity Units (NTU). Particulates in water can include bacteria, viruses and protozoans that can cause disease. Turbidity measurements are used to determine the effectiveness of the treatment processes used to remove these particulates. Values reported are the lowest monthly percentage of samples that met the turbidity limit (0.3 NTU for EPA and 0.1 NTU for the state) and the highest filtered water turbidity measurement obtained in 2008.

MCL = Maximum Contaminant Level: The highest level of a contaminant that is allowed in drinking water. MCLs are set as close to the MCLGs as feasible using the best available treatment technology.

MCLG = Maximum Contaminant Level Goal: The level of a contaminant in drinking water below which there is no known or expected risk to health. MCLGs allow for a margin of safety.

NTU = Nephelometric Turbidity Unit: The unit of measurement for turbidity.

TT = Treatment Technique: A required process intended to reduce the level of a contaminant in drinking water. The turbidity MCL that applies to the Tolt water supply is 5 NTU.

AL = Action Level: The concentration of a contaminant which, if exceeded, triggers treatment or other requirements which a water system must follow (for lead and copper monitoring results).

NA - Not Applicable (EPA has not established these goals).

ND - Not Detected.

NR - Not Regulated (these substances are not regulated by EPA).

ppm = Parts per Million: (One part of a particular contaminant is present for every million parts of water).

ppb = Parts per Billion: (One part of a particular contaminant is present for every billion parts of water).

Conversions:

1 part per million (ppm) = 1 mg/L

1 part per billion (ppb) = 1 ug/L

1 ppm = 1000 ppb

1 mg/L = 1000 ug/L

Detected Unregulated Contaminants

Parameter	Units	Ideal Level/Goal	Edmonds Water		Typical Sources
		(MCLG)	Range	Average	
Bromodichloromethane[1,2]	ppb	0	1.1 - 2.0	1.5	Disinfection by product from chlorine
Chloroform (trichloromethane)[1,2]	ppb	300	23.3 - 36.0	32.1	
Total Trihalamethanes (TTHM)[2]	ppb	See Note 3	27.6 - 39.2	33.7	
Dichloroacetic Acid[1,2]	ppb	0	2.4 - 19.2	8.6	
Trichloroacetic Acid[1,2]	ppb	300	10.0 - 24.5	18.6	
Haloacetic Acids (HAA5)[2]	ppb	See Note 4	14.5 - 47.4	28.9	

1These substances are disinfection by-products which must be monitored to determine compliance with the USEPA Stage 1 and Stage 2 Disinfectants/Disinfection By-products Rules (Stage 2 D/DBPR).

[2] Includes results for 16 study sites and four additional sites that are monitored for compliance with current regulations. The study sites were monitored during October and December 2007 as part of a required study to identify new distribution system monitoring sites. This study known as the initial distribution system evaluation, or IDSE, and will continue through August 2008. The IDSE is required by the Stage 2 D/DBPR regulations.

[3]The MCL for TTHM is 80 ppb.

[4]The MCL for HAA5 is 60 ppb.

Voluntary Information

Parameter	Units	Everett Water Results	
		Range Detected	Average Value
Alkalinity[2,3]	ppm[2]	12.2 - 29.0	17.1
Aluminum[3]	ppb	0.008 - 0.050	0.016
Arsenic[4]	ppb	ND[1]	ND[1]
Calcium Hardness[3]	ppm[2]	7.1 - 12.0	8.9
pH[3]	s.u.	6.8 - 9.1	8.1
Sodium[4]	ppm	6.2 - 7.1	6.3
Total Hardness[2,3]	ppm[2]	9.1 - 13.3	11.3

[1]ND = Not Detected

[2]Hardness and alkalinity units are in ppm as $CaCO_3$ (calcium carbonate equivalent units).

[3]Results are from samples collected from 26 locations in Everett's distribution system.

[4]Sodium and Arsenic are monitored at the treatment plant effluent.

Possible Water Quality Concerns

Cryptosporidium

Cryptosporidium parvum is a protozoan pathogen (disease-causing organism) commonly found in the natural environment. Most rivers and streams across the country have detectable concentrations of this pathogen. From both surface water sources, *Cryptosporidium* sources include deer, elk, and moles in the watersheds. Chlorination is ineffective against *Cryptosporidium*; however, there have been no disease outbreaks associated with either of our drinking water sources.

Seattle monitored for *Cryptosporidium* in the source water (prior to treatment) monthly for 18 months in 1997 and 1998, in accordance with the Federal Information Collection Rule. *Cryptosporidium* was not detected in any of the 18 untreated water samples on the Tolt system. In 2004, *Cryptosporidium* samples were not collected from Seattle's Tolt supply due to removal and inactivation of *Cryptosporidium* by the new Tolt Filtration Plant. The City of Everett routinely monitors for *Cryptosporidium* in the source water and in their treated water before it enters the distribution system. In 2005, one of the 12 monthly samples of the raw, source water showed the presence of *Cryptosporidium*. However, no *Cryptosporidium* was detected in the finished/treated water you receive. The City of Everett reduces the risks from this organism by optimized filtration processes at its water filtration plant.

Furthermore, the method used for detecting *Cryptosporidium* cannot determine if the organisms which are detected are alive and possibly harmful, or dead and presumably harmless.

By protecting our watersheds, the likelihood of the occurrence of *Cryptosporidium* and other potentially harmful organisms in these two source waters are greatly reduced. Some people may be more vulnerable to contaminants in drinking water than the general population. Immuno-compromised persons such as persons with cancer undergoing chemotherapy, persons who have undergone organ transplants, people with HIV/AIDS or other immune system disorders, some elderly, and infants can be particularly at risk from infections. These people should seek advice about drinking water from their health care providers. Environmental Protection Agency (EPA) / Center for Disease Control (CDC) guidelines on appropriate means to lessen the risk of infection by *Cryptosporidium* and other microbial contaminants are available from the Safe Drinking Water Hotline by calling 1-800-426-4791.

Radon

Although we are not required to test for radon, Seattle and Everett have tested their sources to determine its occurrence. Monitoring shows that radon was not present in either Spada or the Tolt water supplies. The EPA is currently developing a new rule related to radon. Seattle and Everett expect to be able to meet the new radon regulations with no additional treatment.

Information from EPA

To ensure that tap water is safe to drink, EPA adopts regulations setting the water quality standards for the public water systems. The Federal Food and Drug Administration regulates contaminants in bottled water and is responsible for providing the same level of public health protection. Drinking water, including bottled water, may reasonably be expected to contain at least small amounts of some contaminants. The presence of contaminants does not necessarily indicate that water poses a health risk. More information about contaminants and potential health effects can be obtained by calling the Environmental Protection Agency's Safe Drinking Water Hotline (1-800-426-4791).

Lead and Copper

As part of regional monitoring conducted in the 1990's, drinking water in "potentially high risk" homes was tested for lead and copper under "worst case" conditions.

POTENTIALLY HIGH RISK: homes or buildings that were built or replumbed with copper pipes and lead-based solder between 1978 and 1980. Lead solder was banned in the Seattle area in 1980. Homes with copper plumbing installed before 1978 may still have some risk, but the risk decreases as the plumbing ages. If you do not have copper plumbing, your risk is low.

WORST CASE: when water has not been used, and has been sitting stagnant in the pipes for six hours or longer (such as first thing in the morning, or in the evening). If your home or building is "potentially high risk," you may want to flush water that has been standing for six hours or longer, prior to using it for cooking or drinking. Many people flush until they notice the temperature change, usually less than 30 seconds. Be "water smart" though, use the flushed water for watering plants, etc. If your home does not meet EPA's "high risk" criteria, you may still be at some risk from lead leaching from brass faucets. You only need to run 6-8 ounces of water to flush what is inside the faucet.

There are health impacts from lead in the water. Infants and children who drink water containing lead in excess of the action level could experience delays in their physical or mental development. Children could show slight deficits in attention span and learning abilities.

Adults who drink this water over many years could develop kidney problems or high blood pressure. If you have children in your home, it is especially important for you to know what kind of plumbing your home has and when it was installed. A plumber should be able to help determine your plumbing materials. You could have your water tested at your own expense.

The following table shows the lead and copper regional monitoring for Everett, which includes homes served by Edmonds.

Everett Regional Monitoring

Parameter	Units	MCLG	Action Level	90th percentile	# Homes Exceeding Action Level	Source
Lead	ppb	0	15	.3	3 out of 134 (2.2%)	Corrosion of household plumbing systems
Copper	ppm	1.3	1.3	0.188	None	

APPENDIX K

THIS PAGE INTENTIONALLY LEFT BLANK

CITY OF EDMONDS
WATER QUALITY REGULATORY COMPLIANCE
TOTAL COLIFORM MONITORING PLAN

Prepared by: Linda McMurphy
Water Quality Technician
City of Edmonds
November 30, 2010

TABLE OF CONTENTS

SECTION I

TOTAL COLIFORM RULE

1.1 General Information

1.2 Sampling Requirements Set

1.3 City of Edmonds Routine Sampling Requirements

1.4 In valid Samples

1.5 Variance to the Total Coliform Rule

1.6 Reporting to the State

SECTION II

EDMONDS WATER SYSTEM OVERVIEW

2.1 General Information

2.2 Pump Station Location

2.3 Reservoir Locations

2.4 Pressure Reducing Valve (PRV) Locations

2.5 Sample Stand Locations

2.6 Repeat Sample Locations

SECTION III

OPERATIONAL PROCEDURES

3.1 Operational Responses to Unsatisfactory Samples

SECTION IV

PUBLIC NOTIFICATION REQUIRED ELEMENTS

4.1 Overview

4.2 When to Notify

4.3 Public Notice Tiers 1, 2 and 3

4.4 What Violations and Situations Require Public Notice

4.5 Content of Public Notice-Ten Required Elements

4.6 Standard Language for Public Notice

SECTION V

KEY CONTACTS

5.1 City of Edmonds Water

5.2 City of Everett Water

5.3 Department Of Health

5.4 Public School Districts

5.5 Private Schools

5.6 Laboratories

5.7 City Contacts

5.8 Media Contacts

SECTION VI

GLOSSARY OF TERMS

SECTION VII

PUBLIC NOTIFICATION HANDBOOK

SECTION VIII

WAC 246-290

SECTION IX

MAPS-COLIFORM MONITORING LOCATIONS

SECTION I

TOTAL COLIFORM RULE

1.1 General Information

On June 1989, the Environmental Protection Agency (EPA) promulgated a revised regulation for total coliforms, including fecal coliforms and E. coli. These regulations apply to all public water systems. Where the previous regulation was based on the density of coliform in a given volume of water, the revised rule is based on the presence/absence of coliforms. Under the Total Coliform Rule (TCR) utilities must develop a monitoring plan to collect representative samples of water throughout the distribution system. Monitoring frequency is based on population served. For a Group A system, compliance is based on no more than 5% of the samples collected for systems collecting greater than 40 samples. Additionally, coliform positive samples must be analyzed for fecal coliform and/or E. Coli. Repeat samples collected for positive coliform, must also be analyzed for fecal coliform and/or E. Coli. The TCR was effective December 31, 1990. The TCR was implemented and enforced in Washington under the federal Rule on September 1, 1991. The TCR was adopted and effective in the Washington Drinking Water Regulations in February 1992.

1.2 Sampling Requirements Set

1. Systems that are required to collect at least 40 samples per month cannot have coliform-positive results in more than 5% of the samples collected each month.
2. Systems collecting less than 40 samples per month cannot have coliform-positive results in more than one sample per month.
3. **Tier 1** TCR-MCL violation occurs when there is:
    a. Fecal coliform presence in a repeat sample
    b. E. Coli presence in a repeat sample; or
    c. Coliform presence in a set of repeat samples collected as a follow-up to a sample with fecal coliform or E. Coli presence

1.3 Edmonds Routine Sampling Requirements

The City of Edmonds Water Division (COE) is one of approximately 3 separate water systems that purchase their water from Alderwood Water District and its wholesale customers have been participation in a regional, DOH approved, coliform monitoring program since 1972. As part of the regional program, wholesale customers are responsible for installing and maintaining designated coliform monitoring sample stands and collect the routine monthly samples. COE is also responsible for collecting any repeat samples.

COE currently supplies water to a population of approximately 31,555 therefore; the minimum number of routine samples collected within COE's distribution system is 30-samples per month. However, 36 samples are taken each month to adequately cover each pressure zone, reservoir and source distribution.

1.4 Invalid Samples

The state can invalidate a positive total coliform sample under three conditions:

1. The laboratory determines that improper sample analysis caused the total coliform-positive result,
2. The state determines that the positive coliform sample resulted from a domestic or other non-distribution system plumbing problem (the state cannot invalidate a sample on the basis of repeat sample results unless all repeat samples collected at the same tap as the original total coliform-positive sample are also total coliform-positive, and all repeat samples collected within five service connections of the original tap are total coliform-negative), or
3. The state has substantial grounds to believe that a total coliform positive result is due to a circumstance or condition which does not reflect water quality in the distribution system. A laboratory must invalidate a total coliform sample (unless total coliforms are detected) if the sample produces a turbid culture in the absence of gas production, using an analytical method where gas formation is examined.

1.5 Variance to the TCR

Concerns were raised about the TCR because no variance or exemptions were allowed. The concern was that biofilm in the distribution system may lead to a violation of the TCR even though there would not be a demonstrable risk to public health. In August 1989, the American Water Works Association (AWWA) filed a legal petition for review the rule in the U.S. Court of Appeals. As a result of those activities, EPA agreed to allow variance to systems not at risk for fecal or pathogenic contamination. EPA developed interim criteria as guidance to states seeking to identify systems that could operate under a variance with out posing an unreasonable risk to health. In the future, EPA will establish variance criteria. Public notification is required for a Group A system operating under a variance.

1.6 Reporting to the State

According to the Washington drinking water regulations, The City of Edmonds Water Division (COE) shall notify the State Department of Health as follows, in the following situations:

1. After a notice is provided to customers, COE must, within 10 days, send DOH a copy of each type of notice your distribute (e.g., newspaper article, press release to TV/radio, mail notices) and a certification that you have met all the public notification requirements (141.31(d)0. COE must send certifications for both initial and any repeat notices. (When you certify, you are also stating that you will meet future requirements for notifying new billing units of the violation are situation.)
2. For **Tier 1** violations COE must initiate consultation with DOH as soon as practical but within 24 hours.
3. For **Tier 2** violations COE must initiate consultation with DOH as soon as practical but within 24 hours.
4. For **Tier 3** violations and other situation requiring notice within 1 year COE may initiate consultation with DOH as soon as practical but within 24 hours to establish if the tier should be upgraded.

SECTION II

CITY OF EDMONDS WATER SYSTEM OVERVIEW

2.1 General Information

Edmonds Water System (Identification # 22500U) buys its water from Alderwood Water District which in turn Alderwood buys its water from City of Everett. COE's service area includes approximately 9.5 square miles and includes a population of approximately 31,555. The service area is located in Southern Snohomish County. The surrounding purveyors include the City of Lynnwood, City of Mountlake Terrace, Seattle Public Utilities, and Olympic View Water District. The City of Edmonds has interties with Olympic View Water District and Seattle Public Utilities for use in an emergency situation only.

COE has four reservoirs with a total volume of 7.5 MG in the direct service area to provide equalizing storage and fire flows. COE has a chlorine booster station that uses Calcium Hypochlorite tablets which currently provides no treatment since 1992.

COE has 36 sample stands for routine coliform compliance monitoring. Sample stands are used to overcome the problems of gaining daily access to public and private premises for water quality sampling. These stands are located to represent different population concentrations, pressure zones and storage facilities so that representative water samples can be collected. COE's distribution system is comprised of over 179 miles of water supply and distribution mains, nearly 1,086 hydrants and 22 pressure reducing stations.

2.2 Pump Station Location

LOCATION	
Five Corners Pump Station	84th & Bowdoin Way

2.3 Reservoir Locations

Tank # (size)	Address	Inspected	Cleaning
Five Corners 1.5 mg	84th & Bowdoin Way	Weekly	Five Years
Five Corners 3.0 mg	84th & Bowdoin Way	Weekly	Five Years
Yost Park 1.5 mg	9601 Bowdoin Way	Weekly	Five Years
Seaview 1.5 mg	185th & 90th Ave	Weekly	Five Years

2.4 Pressure Reducing Valve (PRV) Locations

PRV STATION NO.	LOCATION	MAIN SIZE
1	72nd W & No Meadowdale	4
2	68th & No Meadowdale	4
3	7082 Meadowdale Bch Rd	6
4	74th & Meadowdale Bch Rd	4
5	Braemar Dr & 76th	6
6	176th & 76th	6
7	188th & 76th	6
8	80th & 184th St	8
9	84th & 184th St	4
10	88th & 185th St	6
11	8900 & 188th	6
12	89th & 192nd St SW	4
13	12th & Main St	6
14	Olympic & Main St	6
15	9th & Pine St	4
16	Alderwood Water meter vault	12
17	198th & 99	4

2.5 Sample Stand Location

Sample Stand #	Location	Sample Stand #	Location
101	7707 203rd St SW	201	242nd & 78th Pl W
102	Stevens Hospital / faucet	202	7909 238th St SW
103	22814 75th Ave W	203	415 7th Ave No
104	7621 234th St SW	204	8th & Caspers St
105	CL2 Shack / faucet	205	1412 Olympic Ave
106	740 Elm St	206	1045 Daley St
107	"A" Ave & Pine St	207	401 12th Ave No
108	539 3rd Ave So	208	20709 Maplewood Drive
109	R.R. & Dayton St	209	20408 86th Pl W
110	725 7th Ave No	210	21626 88th Ave W
111	1429 10th Pl No	211	20924 81st Pl W
112	8500 186th St SW	212	19921 81st Pl W
113	8302 Talbot Rd	213	8329 Sierra Drive
114	18301 76th Ave W	214	19128 92nd Ave W
115	17812 72nd Ave W	215	18119 Andover St
116	6900 Meadowdale Bch Rd	216	7506 180th St SW
117	16510 72nd Ave W	217	6801 No Meadowdale Rd
118	16340 75th Pl W	218	6631 172nd St SW

2.6 Repeat Sample Locations

Sample #	Up Stream Location	Down Stream Location	Sample #	Up Stream Location	Down Stream Location
101	7819 202nd St SW	7623 202nd St SW	201	8009 242nd St SW	7625 242nd St SW
102	21309 76th Ave W	21827 76th Ave W	202	8101 238th St SW	23803 78th Ave W
103	7410 228th St SW	22916 75th Ave W	203	211 7th Ave So	701 7th Ave So
104	7625 234th St SW	23302 76th Ave W	204	720 Caspers St	1025 9th Ave No
105	9425 Bowdoin Way	1033 Walnut St	205	19808 Olympic Ave	1304 Olympic Ave
106	1132 8th Ave So	1126 8th Ave So	206	516 Olympic Ave	1009 Daley St
107	920 7th Ave So	1044 "A" Ave	207	541 12th Ave No	311 12th Ave No
108	507 3rd Ave So	709 3rd Ave S	208	20529 Maplewood Dr	8831 Main St
109	200 Dayton St	336 Admiral Way	209	20584 86th Pl W	8625 204th St SW
110	825 7th Ave No	617 7th Ave No	210	8910 216th St SW	8807 218th St SW
111	1521 10th Pl No	1402 10th Pl No	211	21003 81st Pl W	20832 82nd Ave W
112	18622 84th Ave W	8618 185th Pl W	212	19817 81st Pl W	8223 200th St SW
113	8200 Talbot Rd	8498 Talbot Rd	213	19025 84th Ave W	8223 Sierra Dr
114	18223 76th Ave W	18530 76th Ave W	214	9120 190th St SW	8921 192nd St SW
115	17618 72nd Ave W	18006 72nd Ave W	215	18013 Andover St	8133 184th St SW
116	6830 Mead. Bch Rd	17226 Mead. Bch Rd	216	7538 180th St SW	18003 74th Ave W
117	16419 72nd Ave W	16616 72nd Ave W	217	6802 162nd Pl W	16321 70th Pl W
118	16510 75th Pl W	16220 75th Pl W	218	7503 172nd St SW	17111 68th Ave W

SECTION III

OPERATIONAL PROCEDURES

3.1 Operational Responses to Unsatisfactory Samples

When an unsatisfactory sample(s) (coliform positive) has been confirmed the area around or the pressure zone where the unsatisfactory sample was obtained from shall be thoroughly flushed, and the sample stand disinfected. A chlorine residual shall be taken before and immediately after flushing. If a low chlorine residual (below .20 ppm) is found, additional flushing and other appropriate measures to boost the chlorine levels in the system shall be undertaken. Recent activities within the area of the bad sample shall be researched to determine if a cross-connection or other source caused the positive sample. Do not assume source water is contaminated until all other possibilities have been eliminated.

Repeat samples must be collected within 24 hours of being informed by the laboratory that a routine sample tested positive for coliform. Repeat samples include three samples as follows: (See section 2.7 for repeat sample locations)

1. One sample must be collected from the same sample site that the original coliform presence results came from.
2. One sample must be taken within 5 service connections upstream of the original, positive *routine sample*
3. One sample must be taken within 5 service connections downstream of the original, positive coliform *routine sample.*

If total coliform is detected in any **REPEAT SAMPLE,** City of Edmonds Water is responsible to collect an additional set of repeat samples performed in the same manner mentioned above. Furthermore, all total coliform positive samples must be tested for fecal coliform or E. *coli* bacteria. If samples are not tested for these types of bacteria, it will be assumed by the WDOH that the samples are positive for fecal and or E. *coli.*

SECTION IV

PUBLIC NOTIFICATION

4.1 Overview

The Public Notification (PN) Rule requires public water systems (PWSs) to alert consumers to potential health risks form violations of drinking water standards and to tell them how to avoid or minimize such risks. The revised PN Rule, published in the Federal Register on May 4, 2000 modifies the minimum requirements PWSs must meet regarding the form, manner, frequency, and content of public notices. Primacy States must revise their drinking water programs by adopting regulations that are at least as stringent as the revised public notification requirements as soon as possible but no later than May 6, 2002.

Public notification of drinking water violations provides a means to protect the public health and builds trust with consumers through open and honest sharing of information and establishes an ongoing, positive relationship with the community. Public notice can also help consumers understand rate increases and support increased funding for drinking water treatment and protection. EPA believes the new requirements make it easier for systems to provide consumers with more accurate and timely information on violations and the seriousness of any potential adverse health effects.

4.2When to Notify

Notification to the public shall only be made after confirmation of an MCL violation with the Everett Environmental Laboratory and the Washington State Department of Health and after notice of the violation has been provided to the City of Edmonds Water.

4.3 Public Notice Tiers 1, 2 and 3

EPA has assigned each violation and situation requiring public notification to one of three categories, or tiers, based on the risk of adverse health effects. After you learn of a violation or situation, public notice must be provided following the requirement summarized in table.

Table 1

Requirements for Issuing Public Notice

Tier	Deadline for Notice	Delivery Methods to Use*	Where to find….
1	24 hours**	**PWSs are required to use, at a minimum, one or more of the following methods:** 1) Appropriate broadcast media (radio or television) 2) Posting, 3) Hand delivery, or, 4) Another method as needed to reach others	4.4, 4.5, PN Handbook
2	30 days***	**Unless directed by the State in writing, a PWS must provide notice by the following methods:** 1) Mail or other direct delivery (hand delivery) and 2) Another method as needed to reach others	4.4, 4.5, PN Handbook
3	1 year****	**Unless directed by the State in writing, a PWS must provide notice by the following methods:** 1) Mail or hand delivery 2) Another method as needed to reach others	4.4, 4.5, PN Handbook

* Primacy agencies (DOH) may approve other methods.

** For Tier 1, systems must also initiate consultation with the primacy agency (DOH) within 24 hours.

*** Systems with turbidity MCL violations based on the average of samples over two days or with turbidity single exceedance treatment technique violations must consult with the primacy agency (DOH) within 24 hours after learning of the violation.

**** EPA recommends consolidating all Tier 3 violations and situations occurring within a given year into an annual notice.

4.4 What Violations and Situations Require Public Notice

Table 2 (next page) shows the organization of violation and situations into tiers, based on the seriousness of any potential adverse health effects. You can also refer to Public Notification Handbook (Section 9)

Table 2

Violations and Situations Requiring Public Notice

Tier 1 Violations and Other Situations Requiring Notice Within 24 Hours*

1. Violation of the MCL for total coliform, when **fecal coliform or E. coli** are present in the water distribution system, or **failure to test** for fecal coliform or E. coli when any repeat sample tests positive for coliform;
2. Violation of the MCL for **nitrate, nitrite, or total nitrate and nitrite**; or when a **confirmation sample** is not taken with 24 hours of the system's receipt of the first sample showing exceedance of the nitrate or nitrite MCL;
3. Exceedance of the **nitrate** MCL (10 mg/l) by non-community water systems, where permitted to exceed the MCL (up to 20 mg/l) by the primacy agency (DOH);
4. Violations of the MRDL for **chlorine dioxide** when one or more of the samples taken **in the distribution system** on the day after exceeding the MRDL at the entrance of the distribution system or when required **samples are not taken** in the distribution system;
5. Violation of the **turbidity MCL** of 5 NTU, where the primacy agency determines **after consultation** that a Tier 1 notice is required or where consultation does not occur in 24 hours after the system learns of violation;
6. Violation of the **treatment technique** requirement resulting from a **single exceedance** of the maximum allowable **turbidity limit**, where the primacy agency determines **after consultation** that a Tier 1 notice is required or where consultation does not take place in 24 hours after the system learns of violation;
7. Occurrence of a waterborne disease outbreak, as defined in 40 CFR 141.2, or other waterborne emergency; and
8. Other **violations or situations** with significant potential to have serious adverse effects on human health as a result of short term exposure, as **determined by the primacy agency** either in its regulations or on a case-by-case basis.

* If your system has any of these violations or situations, in addition to issuing public notice, you must **initiate consultation with your primacy agency (DOH) as soon as practical by within 24 hours** after learning of the violation or situation.

Tier 2 Violations Requiring Notice Within 30 Days**

1. All violations of the **MCL, MRDL**, and **treatment technique** requirements **except** where **Tier 1** notice is required;
2. Violations of the **monitoring** requirements where the **primacy agency (DOH) determines** that a Tier 2 public notice is required, taking into account potential health impacts and persistence of the violation; and
3. Failure to comply with the **terms** and **conditions** of any **variance or exemption** in place.

** If you exceed the maximum allowable turbidity level, as identified in Appendix A of the Public Notification hand book, you must consult with your primacy agency (DOH) as soon as practical but no later than 24 hours after learning of the violation.

Tier 3 Violations and Other Situations Requiring Notice Within 1 Year

1. **Monitoring** violations, except where Tier 1 notice is required or the primacy agency (DOH) determines that the violation requires a Tier 2 notice;
2. Failure to comply with an established **testing procedure**, except where Tier 1 notice is required or the primacy agency (DOH) determines that the violation requires a Tier 2 notice;
3. Operation under variance granted under §1415 or exemption granted under §1416 of the Safe Drinking Water Act;
4. Availability of **unregulated contaminant** monitoring results; and
5. Exceedance of the secondary maximum contaminant level for **fluoride**

4.5 Content of Public Notice – Ten Required Elements

Public notice must include specific information in order to be considered complete. For each violation and situation requiring notice **(except** for fluoride SMCL exceedances, availability of unregulated contaminant monitoring data and operation under a variance or exemption), you must provide a clear and readily understandable explanation of the following:

1. Description of the violation or situation, including the contaminant(s) of concern, and (As applicable) the contaminant level(s);
2. When the violation or situation occurred;
3. Any potential adverse health effects from drinking the water, using mandatory language provided in the PN Handbook (Section 9);
4. The population at risk, including subpopulations particularly vulnerable if exposed to the contaminant in their drinking water;
5. Whether alternative water supplies should be used;
6. What actions consumers should take, including when they should seek medical help, if known;
7. What you are doing to correct the violation or situation;
8. When you expect to return to compliance or resolve the situation;
9. Your name, business address, and phone number or those of a designee of the public water system as a source of additional information concerning the notice; and
10. A statement encouraging notice recipients to distribute the notice to other persons served using standard language from the rule, where applicable.

Required Elements of a Public Notice

1) Description of the violation or situation

2) When the violation or situation occurred

5) Whether alternate water supplies should be used

6) Actions consumers should take

4) The populatio n at risk

3) Potential health effects

7) What is being done to correct the violation or situation

8) When the system expects to return to compliance

9) Name, number and business address for more information

10) Standard distribution language

IMPORTANT INFORMATION ABOUT YOUR DRINKING WATER
Tests Showed Presence of Coliform Bacteria

Our water system recently violated a drinking water standard. Although this incident was not an emergency, as our customers, you have a right to know what happened and what we did to correct this situation.

The Jonesville Mobile Home Park routinely monitors for drinking water contaminants. In July, we took a total of 20 samples to test for the presence of coliform bacteria. Three (3) of our samples tested positive. The standard is that no more than one (1) sample per month may test positive.

What should I do?

You do not need to boil your water or take other corrective actions. However, if you have specific health concerns, consult your doctor.

People with severely compromised immune systems, infants, and some elderly may be at increased risk. These people should seek advice about drinking water from their health care providers. General guidelines on ways to lessen the risk of infection by microbes are available from EPA's Safe Drinking Water Hotline at 1 (800) 426-4791.

What does this mean?

This is not an emergency. If it had been, you would have been notified immediately. Coliform bacteria are generally not harmful themselves. *Coliforms are bacteria which are naturally present in the environment and are used as an indicator that other, potentially-harmful, bacteria may be present. Coliforms were found in more samples than allowed and this was a warning of potential problems.*

Usually, coliforms are a sign that there could be a problem with our treatment or distribution system (pipes). Whenever we detect coliform bacteria in any sample, we do follow-up testing to see if other bacteria of greater concern, such as fecal coliform or *E. coli*, are present. **We did not find any of these bacteria in our subsequent testing, and further testing shows that this problem has been resolved.**

What happened? What was done?

We took additional samples for coliform bacteria which all came back negative. As an added precaution, we chlorinated and flushed the pipes in the distribution system to make sure bacteria were eliminated. This situation is now resolved.

For more information, please contact John Jones of the Jonesville Mobile Home Park at 555-1212 or the manager's office or write to 1200 Jonesville Rd., Jonesville, ST 12345.

Please share this information with all the other people who drink this water, especially those who may not have received this notice directly (for example, people in apartments, nursing homes, schools, and businesses). You can do this by posting this notice in a public place or distributing copies by hand or mail.

4.6 Standard Language for Public Notice

The standard language that needs to be included in a public notice is language to encourage distribution of the notice to all persons served. WWD must include the following language in all notices, where applicable (e.g., in a notice mailed to customers). This language would probably not be necessary on a posted notice, however, since posting makes the notice available to everyone who passes by. It would also not be needed for a notice provided by broadcast and print media. Use of this language does not relive you of your obligation to notify persons served:

> "Please share this information with all the other people who drink this water, especially those who may not have received this notice directly (for example, people in apartments, nursing homes, schools, and businesses). You can do this by posting this notice in a public place or distributing copies by hand or mail."

Tier 1 or Tier 2 Violation

Health effects language for MCL and MRDL violations, treatment technique violations, and violations of the condition of a variance or exemption. WWD must include the health effects language specified in PN Handbook for such violations. WWD must also describe potential health effects for other situations, even if there is no mandatory language.

Tier 3 Violation

Language for monitoring violations (includes testing procedure violations). WWD must include the following language for all monitoring and testing procedure violations:

> "We are required to monitor your drinking water for specific contaminants on a regular basis. Results of regular monitoring are an indicator of whether or not your drinking water meets health standards. During [compliance period], we ['did not monitor or test' or did not complete all monitoring or testing'] for [contaminant(s)], and therefore cannot be sure of the quality of your drinking water during that time."

SECTION V

KEY CONTACTS

5.1 City of Edmonds

Name	Phone Number
Phil Williams (Director of Public Works)	425-771-0235 Ext. 1634
Jim Waite (Water / Sewer Manager)	425-771-0235 Ext. 1649
Kris Kuhnhausen (Water Lead)	425-771-0235 Ext. 1647
Linda McMurphy (Water Quality Technician)	425-771-0235 Ext. 1644

5.2 Water Utilities

Name	Phone Number
Alderwood Water/Sewer District	425-743-4605
Olympic View Water /Sewer District	425-774-7769
City of Everett (Mark Weeks)	425-257-8878
Lynn Kirby (Water Quality Engineer)	206-684-0216

5.3 Department of Health

DOH after hour Hotline	877-481-4901
Jennifer Prodzinski (Coliform Monitoring)	253-395-6775
Carol Stuckey (Coliform Monitoring)	253-395-6775
Jolyn Leslie (Regional Engineer)	253-395-6762

5.4 Public School Districts

Edmonds School District 15	425-670-7244

5.5 Private Schools

Edmonds Holly Rosary	425-778-3197

5.6 Laboratories

Everett Environmental Laboratory	425-257-8230
SPU Water Quality Laboratory	206-684-7404
SPU Water Quality Chemistry (Brian Hoyt)	206-386-1102
AM Test (Redmond)	425-885-1664

5.8 Media Contacts

Newspaper Contacts

The Everett Herald	425-339-3089
The Seattle Times	206-652-6290
Seattle Post-Intelligencer	206-464-2994

Television Contacts

KING TV (Channel 5)	206-448-5555
KSTW TV (Channel 11)	206-572-5789
KIRO TV (Channel 7)	206-728-7777
KOMO TV (Channel 4)	206-443-4000

Radio Contacts

KIRO (AM 710)	425-728-5450
KOMO (AM 1000)	425-443-4010

Public Notification is to be made only after confirmation with Everett Environmental Laboratory and coordination with management of The City of Edmonds.

SECTION VI

Glossary of Terms

ACUTE – posing an immediate risk to human health

AWWA – American Water Works Association

BIOFILM – biological regrowth of bacterial or organic nature that can use up CL2

COLIFORM – are one of a group of microbiological contaminants regulated as part of the Safe Drinking Water Act (SDWA) written by the US Protection Agency (EPA). The many types of coliform, including fecal coliforms are usually not disease causing (pathogenic). However their presence in drinking water indicates the potential presence of fecal coliform in drinking water indicates that an urgent public health problem may exist

COLIFORM SAMPLE – a sample of water collected from the distribution system at or after the first service and analyzed for coliform presence

CONTAMINANT – a substance present in drinking water, which may adversely affect the health of the consumer or the aesthetic qualities of the water

DISTRIBUTION SYSTEM – that portion of a public water system, which conveys water from the source and/or treatment facilities to consumers

DOH – Department of Health

E-COLI – Fecal Coliform Bacteria

EPA – Environmental Protection Agency

GROUP A WATER SYSTEM – a public water system with fifteen or more service connections, regardless of the number of people; or serving any average of twenty-five or more people per day for sixty or more days within a calendar year, regardless of the number of service connections

MCL – Maximum Contaminant Level

NON-ACUTE – posing a possible or less than immediate risk to human health.

NTNC – Non-Transient non community

POTABLE – water suitable for drinking by the public

PRV – Pressure reducing station

PURVEYOR – agency, subdivision of the state, municipal corporation, firm, company, mutual or cooperative association, institution, partnership, or person or other entity owning or operating a public water system. Purveyor also means authorized agents of such agencies.

REPEAT SAMPLE – a sample collected on a monthly or regular basis, as part of the monitoring plan

SAMPLE SITE – a designated site to collect samples for analysis.

SERVICE CONNECTION – a connection to public water system designed to provide potable water to a single family residence, or other residential or non-residential population.

SOURCE – the origin of the water that the purveyor is receiving

TURBID – measurable indication of water clarity (High levels can indicate water quality problems)

APPENDIX L

THIS PAGE INTENTIONALLY LEFT BLANK

Chapter 7.10
WATER SERVICE

Sections:

7.10.010 Application for water use.
7.10.020 Accounts – Payments.
7.10.025 Delinquency charge.
7.10.030 Suspension of water use – Procedure.
7.10.040 Access to buildings.
7.10.050 Access to curb cocks and meter covers.
7.10.060 Limitation on water use.
7.10.061 Water restrictions – Powers of the city.
7.10.062 Water restrictions – Surcharge.
7.10.063 Enforcement.
7.10.065 Suspension of service – Failure to comply with sewer connection notice.
7.10.070 Turn on and turn off charges.
7.10.080 Request for inspection of meters.
7.10.110 Charge and bill adjustments.
7.10.120 Service connections.
7.10.130 Service pipe – Depth and size – Work left uncovered until inspected.
7.10.140 Dormant services – Connections.
7.10.150 Service pressure corrections.
7.10.160 Stop and waste valves.
7.10.170 Water shut-off – Temperature relief valve, pressure relief valve, and check valve required.
7.10.180 Unlawful acts.

7.10.010 Application for water use.
All applications for the use of water shall be made at the development services department by the owner, or by the owner's authorized agent, on printed forms furnished by said department for that purpose, and shall contain the name and description of the lot, block and addition. The applicant shall state the purposes for which the water is to be used and shall agree to conform to the ordinances, rules, and regulations, with modification which may be adopted, as a condition for use of water. [Ord. 3629 § 2, 2007; Ord. 2214 § 1, 1981; Ord. 2139 § 3, 1980; Ord. 413 § 9, 1929].

7.10.020 Accounts – Payments.
A. All accounts shall be kept in the name of the owner, and all charges shall be made against the property as well as the owner thereof. No change of ownership or occupancy shall affect the application of this section. All bills are payable within 25 days from the billing date. If water bills are not paid within a stated period, the water will be shut off. Water will be turned on after payment of the fees as set forth in ECC 7.10.070, in addition to the amount of delinquent charges.

B. At least 10 days before water is scheduled to be shut off, the administrative services director, or a designated city official, shall notify the owner and the occupant of the property. The owner shall be notified by mail at the address on the account, and the occupant shall be notified by mail, door hanger or other form at the property. Mailed notices shall be deemed received three business days after mailing. All notices shall contain the following:

1. Reason for water shut off;

2. Delinquent amount that needs to be paid to avert interruption in water service;

3. Instructions on scheduling a hearing to show that the account is not delinquent; and

4. The day on or after which water will be shut off.

C. After notification, the owner and the occupant shall be afforded the opportunity to present to the administrative services director, or a designated official, evidence that the delinquent charges have been paid. Such opportunity shall be afforded before the water is shut off; provided, that the owner or the occupant make a request for the same to the administrative services director, or a designated official, within three days of presumptive receipt of the notice. The burden shall be on the owner and/or occupant to prove that the delinquent charges have been paid.

D. After reviewing the evidence by the owner and/or occupant, the administrative services director, or the designated official to whom the evidence was presented, shall decide whether or not the account remains delinquent. The owner

and the occupant shall be notified of the decision, and this decision shall not be subject to further appeal. If the account is found to be delinquent and water has not been shut off, water will be shut off as previously scheduled or three days after final decision, whichever date is later. If the account is not found to be delinquent and water has been shut off, water will be turned on without being subject to turn on and turn off charges in ECC 7.10.070. [Ord. 3629 § 3, 2007; Ord. 2214 § 2, 1981; Ord. 2139 § 4, 1980; Ord. 1942 § 1, 1977; Ord. 1385 § 1, 1968; Ord. 1082 § 1, 1965; Ord. 821, 1960; Ord. 413 § 10, 1929].

7.10.025 Delinquency charge.
A charge equal to 10 percent of the outstanding balance of the delinquent utility bill shall be added as a fee, except in cases of extraordinary hardship as determined by the administrative services director or his/her designee. The decision of the administrative services director can be appealed to the finance committee of the Edmonds city council. The account shall be considered delinquent 35 days after the sending of the regular billing. Such delinquency notice and billing will be provided 35 days following the mailing of a regular utility bill. This charge shall be applicable to all delinquent utility billing accounts. In order to be considered delinquent an account must total $21.00 or more of delinquency, and no delinquency charge shall be levied against any delinquent account under $21.00. This delinquency charge shall be paid prior to the application of any payment against the fee or charge initially assessed and nothing herein shall be interpreted to limit the city's collection of its attorneys' fees and other reasonable costs and charges in the event it is forced to seek judicial remedy for collection. [Ord. 3629 § 4, 2007].

7.10.030 Suspension of water use – Procedure.
Should a customer desire to discontinue the use of water for a period of time, notice thereof must be given in writing to the utility billing department. The water will then be shut off and turned on again upon notice to the utility billing department. The customer shall be required to pay charges as set forth in ECC 7.10.070. [Ord. 3629 § 5, 2007; Ord. 1942 § 2, 1977; Ord. 1448, 1969; Ord. 413 § 17, 1929].

7.10.040 Access to buildings.
Employees of the water division shall have access during business hours to all parts of buildings to which water may be delivered from the city mains for the purpose of ascertaining the number of rooms and families in the house or inspecting the conditions of the pipes and fixtures and the manner in which water is used. [Ord. 413 § 19, 1929].

7.10.050 Access to curb cocks and meter covers.
The water division shall have free access to curb cocks and water meter covers. All persons are prohibited from piling rubbish, building, or other materials thereon. [Ord. 413 § 20, 1929].

7.10.060 Limitation on water use.
In the event that a supplier notifies the city of a shortage of water or the director reasonably determines such a shortage to be imminent, the community services director or his/her designee is authorized to implement the water shortage response plan in order to efficiently safeguard the safety and health of the general public or to provide for the public convenience. The use of water in the city, or in any portion thereof, for irrigation, cooling, sprinkling or other uses may be forbidden, restricted, or regulated and such regulations may be made effective as to all customers or as to particular classes of customers. Rationing may be imposed during any shortage of water, either in lieu of or in addition to other measures hereby authorized.

A. Upon receiving notification from a water supplier of an impending water emergency, the community services director will notify the mayor and city council within 24 hours or on the next business day that a water emergency will be or has been declared.

B. The mayor or community services director will issue a public notification of the declaration of water emergency and imposition of restrictions.

C. Restrictions will be in effect immediately upon issuance of the public notification. Restrictions and the amount of surcharge for violations of mandatory restrictions will be posted and published within seven days of declaration at least one time in a daily newspaper of general circulation. Notification will be delivered to television and radio stations to provide public information coverage.

D. For emergencies when restrictions may extend beyond 21 days, public hearing before the city council will be scheduled by the community services director within seven days following the declaration of emergency. [Ord. 2774 § 1, 1990].

7.10.061 Water restrictions – Powers of the city.
The community services director or his/her designee shall conduct public education efforts regarding the benefits and necessity of conservation by the public, and is authorized to promulgate such rules and regulations as may be necessary to implement water use restriction. The regulations will be on file with the city clerk, and the regulations and

any amendment thereto shall be effective 30 days after said filing with the city clerk. The community services director or his/her designee is further authorized to make exceptions to such restrictions in specific cases as he/she finds reasonable which may in the director's discretion include, but are not limited to, watering newly seeded or sodded lawns, food sources, landscape ornamental plantings required by the architectural design board, when necessary to alleviate unnecessary economic hardship to commercial or industrial activities, or to prevent possible damage to health, safety or welfare. [Ord. 2774 § 2, 1990].

7.10.062 Water restrictions – Surcharge.
It is unlawful for any person to violate water use and restrictions and violation of these provisions shall be a misdemeanor punishable under the general penalty provisions of this code. In addition to other lawful remedies, the community services director or his/her designee is authorized to impose a surcharge for the first occurrence after a documented warning notice and each subsequent violation in which a customer's water usage practices exceed water conservation restrictions as provided for in this chapter. Said surcharge will be added to and become a part of the water bill for the customer in addition to any service rate amounts as set forth in Chapter 7.10 ECC. Prior to the imposition of the first surcharge, a public works division representative shall deliver in person or post a notice at the service address advising of the customer's water usage practices in excess of mandatory water shortage restrictions and advising that a surcharge may be imposed for any further violations. A copy of the violation notice shall also be mailed to the owner and/or occupant. The community services director shall promulgate regulations providing for appeal of any notice of violation. Appeals must be received within five working days of delivery of notice of violation.

A. Surcharges for violations of water restrictions in effect for the balance of 1990 and until thereafter adjusted shall be:

$25.00 for first violation;

$50.00 for each violation thereafter.

B. Surcharges for all customer classes will be reviewed annually based on actual or projected expenses of the water division necessary to maintain a water supply during an emergency. [Ord. 2774 § 3, 1990].

7.10.063 Enforcement.
A. The community services director, or his/her designee, including any employee of the city of Edmonds public works division, or field personnel of the community services department, or police officer of the city, shall have the authority to enforce the provisions of this chapter.

B. In addition to the surcharges provided in ECC 7.10.062, the community services director or his/her designee is authorized to install a water restricting device on the waterline or lines serving any person who commits a second or subsequent violation of any of the provisions of this chapter. Alternatively, after such notice of a violation as may reasonably be given based on the circumstances, the community services director or his/her designee may cause water service to be terminated for subsequent or continuing violation of water conservation restrictions. [Ord. 2774 § 4, 1990; Ord. 2214 § 3, 1981; Ord. 1942 § 3, 1977; Ord. 547, 1943; Ord. 413 § 21A, 1929].

7.10.065 Suspension of service – Failure to comply with sewer connection notice.
A. There exists within the city of Edmonds certain earth subsidence and landslide hazard areas, and other environmentally sensitive areas in which the discharge of sanitary waste from private septic tanks constitutes a hazard to the public health, safety and welfare of the city. Such areas may be designated by the city council or by order of the public works director. The Meadowdale landslide hazard area, as defined and described in documents on file with the city of Edmonds and available for inspection at the request of any individual, is hereby declared to be such an area. Failure of any owner or owners of residential or commercial structures located within such a designated area to connect with available sanitary sewers following notice given in accordance with RCW 35.67.190 is hereby declared to be a public hazard and nuisance.

B. When any owner or owners of property have failed to connect within the period established by written notification, the community services director or his designee shall cause a notification of shut-off of water service to be delivered to the owners of such properties by registered mail. The notice shall specify that water service shall be terminated by the city within 10 days of the date of notice unless:

1. The owner or owners shall cause the property to be connected to the public sewer within such period; or

2. The owner or owners shall apply for a building permit within said 10-day period and connect to the sewer line, present a written contract or adequate assurance between the owner and a licensed plumber evidencing an enforceable obligation and intent to connect to such line and provide a bond in an amount sufficient to fulfill the terms of such agreement in the event that the owner defaults thereon.

C. In the event the owner fails to connect to the sewer line within the 10-day period or to provide the adequate assurances required by subsection (B)(2) of this section, water service to such residential or commercial structures and to the property on which they are located shall be discontinued. Service shall not again be instituted until such time as the owner has connected to the sewer system, paid the actual costs of the city including, but not limited to, disconnecting, reconnecting, notifying the owner and otherwise taking action with respect to the requirements of this section. The actual cost thereof may vary, but the city council hereby establishes such reconnection fee to be $250.00; provided, however, that in the event the actual costs are greater, they may be imposed by written order of the community services director or his designee and the reconnection shall not be completed until such time such assessed costs are paid. In the event that the owner or owners believe that the reconnection charges are in excess of the amount actually incurred or which reasonably may be incurred the city, the owner or owners may appeal the set fee or additionally designated fee to the hearing examiner in the same manner as if it were a Type II decision (see Chapter 20.01 ECDC). [Ord. 3736 § 6, 2009; Ord. 2676 § 1, 1988].

7.10.070 Turn on and turn off charges.
The charge for turning on or off the water other than at the main shall be $20.00 if done during regular working hours. If the water is turned on or off at any time other than during regular working hours, the charge shall be $75.00. [Ord. 3629 § 6, 2007; Ord. 2880 § 2, 1992; Ord. 2214 § 4, 1981; Ord. 2179 § 2, 1980; Ord. 2139 § 5, 1980; Ord. 1942 § 5, 1977].

7.10.080 Request for inspection of meters.
The water division, upon the request of any water user, shall inspect the water meter on the user's premises. A deposit of $20.00 shall be made with such request to cover the cost of such inspection. In the event such meter is found to be overregistering, such deposit shall be returned to the depositor; otherwise, said deposit shall be retained by the city. [Ord. 3629 § 7, 2007; Ord. 821, 1960; Ord. 413 § 22, 1929].

7.10.110 Charge and bill adjustments.
The administrative services director, or such authorized representative as he may designate, is authorized to make adjustments or corrections to billings for any charge for water service, including but not limited to connection charges, minimum monthly billings, meter charges, penalty and special charges, improperly charged rates, and, subject to the city council's approval, the cancellation of uncollectible bills and accounts. [Ord. 3629 § 8, 2007; Ord. 2179 § 2, 1980].

7.10.120 Service connections.
A. All tapping of mains, installation of corporation cock, service pipe leading from the mains to the property line, as well as the turning on and off of the water shall be performed by the water division. All connections inside of the premises shall be made by the owner and at his expense.

B. In case of application for water service on premises not abutting upon a street upon which there is a city water main, the city will lay its connection from the main toward the premises for a distance equal to the distance from the main to the curbline, the distance in no case to exceed 40 feet, and permit connection therewith by means of a union, or may, at the discretion of the director of public works, upon advance payment of the estimated cost thereof, extend the service to the premises of the applicant, but shall not cross or enter private property. [Ord. 413 § 12, 1929].

7.10.130 Service pipe – Depth and size – Work left uncovered until inspected.
All pipes leading from the city's service connection shall be laid not less than 24 inches below the surface of the ground and no work shall be covered up until it has been inspected and accepted by the water division. No such pipes smaller than three-fourths of an inch shall be used. [Ord. 413 § 13, 1929].

7.10.140 Dormant services – Connections.
Any service connection which shall have been inactive, unused or abandoned for a period of 60 days or the house removed from the lot for at least one day shall be considered a dormant service and the meter shall be removed by the water division. If a service connection is subsequently desired for all or a portion of the premises or property previously supplied by a dormant service, the owner of the premises or property or his authorized agent shall make application and pay a service charge in the amount shown in ECC 7.10.090.

7.10.150 Service pressure corrections.
A. Where the water pressure at the main is 80 PSI or greater, the customer may install an approved type strainer and pressure regulator on his own premises in an accessible location. All costs of installation, operation, and maintenance shall be borne by the customer.

B. In services where the water pressure at the main is considered by the customer to be lower than the desired pressure, such customer may, after first requesting and receiving approval of the director of public works, install a pump and pneumatic tank, or by other approved means provide increased pressure to the premises. The location of such installation shall be on the customer's premises and he shall bear all costs of installation, operation, and

maintenance thereof.

7.10.160 Stop and waste valves.
Customers shall, at their own expense, install and maintain all pipes, connections and fixtures from the meter placed by the city. All pipes must be provided with stop and waste valves, protected from freezing and accessible at all times to the customer. The valves shall be located in such manner that said pipes may be drained to prevent freezing and the water may be shut off to repair pipes, fixtures, and appliances, and also to safeguard premises from water damage in case the meter is accidentally turned on. Additional stop and waste valves shall also be placed at all low points in the pipes when they cannot be otherwise drained. The city shall refuse to turn on the water until the provisions of this section are complied with. The city shall not be responsible for freezing, accident or damage of any kind beyond the property line. [Ord. 2179 § 1, 1980; Ord. 413 § 14, 1929].

7.10.170 Water shut-off – Temperature relief valve, pressure relief valve, and check valve required.
A. The city may shut off water from the main at any time for the purpose of making repairs without giving advance notice to the property owner. The city shall not be responsible for any damage proximately caused by said shut-off or failure to give notice of said shut-off.

B. All persons having boilers on their premises for the purpose of heating with hot water or radiant heat are required to have installed, at their expense, a temperature relief valve, pressure relief valve, and a check valve. The owner of the premises shall be responsible to the city for any damages to city water meters caused by water from the owner's premises. The city shall not be responsible for the safety of boilers, hot water tanks, piping or other similar apparatus on the premises of any water customer.

C. The provisions of subsection B shall apply to all boilers presently existing in the city and those installed in the future. All boilers not in compliance at the effective date of this section shall be brought into compliance within six months of the effective date of this section. [Ord. 2009 § 1, 1978; Ord. 413 § 15, 1929].

7.10.180 Unlawful acts.
It is unlawful for any person, corporation, or association to break, damage, or injure in any way any pipe, gate, meter or other water system appliance, or to interfere in any manner with the proper operation of any part of the water system of the city of Edmonds, or to make connection to or alterations in any pipe whereby water may be drawn from the city mains or to take water from any fire hydrant, bibb, pipe, or fixture of any kind, without first having secured a permit from the water division or proper city official. [Ord. 821, 1960; Ord. 413 § 16, 1929].

This page of the Edmonds City Code is current through Ord. 3773, passed December 15, 2009.
Disclaimer: The City Clerk's Office has the official version of the Edmonds City. Users should contact the City Clerk's Office for ordinances passed subsequent to the ordinance cited above.

City Website: http://www.ci.edmonds.wa.us (http://www.ci.edmonds.wa.us)
City Telephone: (425) 771-0245
Code Publishing Company (http://www.codepublishing.com/)

Chapter 7.20
BACKFLOW PREVENTION

Sections:

7.20.010 Definitions.
7.20.020 Cross-connections declared unlawful.
7.20.030 Backflow prevention devices to be installed.
7.20.040 Private water supply systems.
7.20.050 Adoption of state regulations.
7.20.060 Abatement of unlawful cross-connections and installation of backflow prevention devices – Procedures.
7.20.070 Penalties.

7.20.010 Definitions.
A. “Backflow” means a flow, other than the intended direction of flow, of any foreign liquids, gases, or substances into the distribution system of a public water supply.

B. “Backflow prevention device” means a device approved by the state of Washington, Department of Social and Health Services or such other state department as has jurisdiction over the subject matter and by the American Water Works Association, used to counteract back pressure or prevent back siphonage into the distribution system of a public water supply.

C. “Cross-connection” means any physical arrangement whereby a public water supply is connected, directly or indirectly, with any other water supply system, sewer, drain, conduit, pool, storage reservoir, plumbing fixture or other device which contains or may contain contaminated water, sewage or other wastes or liquids of unknown or unsafe quality, which may be capable of imparting contamination to a public water supply as a result of backflow. [Ord. 1711 § 1, 1974].

7.20.020 Cross-connections declared unlawful.
The installation or maintenance of a cross-connection, which, in the opinion of the director of public works or his designee, will endanger the water quality of the potable water supply of the city of Edmonds, is unlawful. [Ord. 1711 § 1, 1974].

7.20.030 Backflow prevention devices to be installed.
Backflow prevention devices, when required to be installed in the opinion of the director of public works or his designated representative, shall be installed and maintained by the service customer on any service connection to the city of Edmonds water supply system where the backflow prevention devices are necessary for the protection of the city of Edmonds' water supply. [Ord. 1711 § 1, 1974].

7.20.040 Private water supply systems.
Use or operation of a private water supply system, contrary to the provisions of the ordinances of the city of Edmonds, or the laws of the state of Washington or the rules and regulations of the State Board of Health regarding public water supplies where the private system is served by the city public water supply is unlawful. [Ord. 1711 § 1, 1974].

7.20.050 Adoption of state regulations.
The community services director or his/her designee is hereby authorized to develop rules and regulations based upon and including the requirements of the rules and regulations of the State Board of Health regarding public water supplies and the protection of such supplies from contamination entitled “Cross-Connection Control Regulations in Washington State,” the provisions of WAC 246-290-490, and the American Waterworks Association, Pacific Northwest Second Edition of “Accepted Procedure and Practice in Cross-Connection Manual.” The provisions of the Washington Administrative Code, the rules and regulations of the Department of Health set forth in the Cross-Connection Control Regulations in Washington State and the previously referenced Accepted Procedure and Practice in Cross-Connection Manual are hereby adopted by this reference as fully as if herein set forth in full. Any additional rules and procedures necessary to implement such regulations shall be developed by the community services director or his/her designee as appropriate. Such rules and regulations shall be kept on file along with copies of the above referenced regulations and manuals in the office of the city engineer of the city of Edmonds. [Ord. 2956 § 1, 1993; Ord. 1711 § 1, 1974].

7.20.060 Abatement of unlawful cross-connections and installation of backflow prevention devices – Procedures.
Cross-connections declared in this chapter to be unlawful whether presently existing or hereinafter installed and/or

services requiring backflow prevention devices and/or unlawful use or operation of a private water supply system served by the city public water supply are public nuisances and, in addition to any other provisions of this code or the ordinances of the city of Edmonds on abatement of public nuisances, shall be subject to abatement in accordance with the following procedure:

A. In the event that the director of public works or his designee determines that a nuisance as herein provided does exist, written notice shall be sent to the person in whose name the water service is established under the records of the city of Edmonds water division, or alternatively, a copy of such written notice shall be posted on the premises served.

B. The notice shall provide that the nuisance described herein shall be corrected within 30 days of the date the notice is mailed or posted on the premises.

C. In the event the nuisance is not abated within the prescribed time, water service to the premises shall be discontinued.

D. In the event that the nuisance, in the opinion of the director of public works or his designated representative, presents an immediate danger of contamination to the public water supply, service from the city water supply system to the premises may be terminated without prior notice; provided, however, notice will be posted on the premises in the manner heretofore provided at the time the service is terminated. [Ord. 1711 § 1, 1974].

7.20.070 Penalties.
In addition to the remedies set forth herein, any person found guilty of violating any of the provisions of this chapter shall be subject to the penalties as set forth in ECC 5.50.020. [Ord. 1711 § 1, 1974].

This page of the Edmonds City Code is current through Ord. 3773, passed December 15, 2009.
Disclaimer: The City Clerk's Office has the official version of the Edmonds City. Users should contact the City Clerk's Office for ordinances passed subsequent to the ordinance cited above.

City Website: http://www.ci.edmonds.wa.us (http://www.ci.edmonds.wa.us)
City Telephone: (425) 771-0245
Code Publishing Company (http://www.codepublishing.com/)

Chapter 7.30
WATER RATES AND SEWER CHARGES

Sections:

7.30.010 Definitions.
7.30.020 Separate single-family residence meters.
7.30.030 Water rates – Meter installation charges.
7.30.035 Water and sewer utility connection charges.
7.30.036 Sewer special connection districts.
7.30.040 Utility charges – Sanitary sewer.
7.30.045 Special connection charge.
7.30.050 Unauthorized use of water.
7.30.060 Severability.
7.30.070 Water, sewer and stormwater rate reductions for low income citizens.
7.30.080 *Reserved*.
7.30.090 Penalties.

7.30.010 Definitions.

A. “Dwelling unit” means a building or portion thereof providing complete housekeeping facilities for one family.

B. “Single-family residence” means a detached building containing one dwelling unit only.

C. “Duplex” means a building, occupying a lot, containing two dwelling units.

D. “Apartment houses” and other “multiple units” (except hotels, tourist courts, trailer parks, and motels) means a building or buildings used for and containing three or more dwelling units occupied on a weekly or monthly basis. Units rented on a weekly or monthly basis shall not be deemed to be tourist courts or motels.

E. “Hotels” means any place with individual rooms rented on a daily or weekly basis.

F. “Tourist courts” and “motels” means detached multiple units, occupied and paid for on a daily basis.

G. “Office buildings” includes all types of professional and business offices, including but not limited to architects, engineers, lawyers, doctors, dentists, real estate offices, etc.

H. “Commercial” and “retail buildings” mean all types of retail and commercial business establishments other than office buildings and other than industrial or manufacturing, and each such business shall be considered as a separate unit even though two or more may be in the same building.

I. In the event there is more than one type of operation in the same building, i.e., a professional office, a retail store, a restaurant, or an apartment, then in that case each separate category or type shall pay at the rate fixed under that particular category or type.

J. “Equivalent residential unit” or “ERU” means a sewer connection charge based upon the winter standard water consumption of a single-family residence of 7.07 per 100 cubic feet of water. [Ord. 3339 § 1, 2000; Ord. 786 § 1, 1959].

7.30.020 Separate single-family residence meters.

Each single-family residence building or structure served by water shall be provided with its own separate water meter. Prior to the time when such additional separate meters can be installed, water rates shall be applicable on the same basis as if the separate meters were actually installed. [Ord. 1449, 1969].

7.30.030 Water rates – Meter installation charges.

A. The bimonthly rates of water supplied through meters shall be fixed at the following levels:

	Effective Dates		
	Existing	**1/1/07**	**1/1/08**
1. Single-family residence (per unit)	$15.63	$16.10	$16.58

2. Duplex, apartment houses, condominiums and other multi-unit residences (per unit)	$13.76	$14.17	$14.60

3. All other customers:

	Existing	1/1/2007	1/1/2008
3/4"	$18.90	$19.47	$20.05
1"	$38.48	$39.63	$40.82
1.5"	$71.16	$73.29	$75.49
2"	$108.48	$111.73	$115.09
3"	$234.02	$241.04	$248.27
4"	$331.49	$341.43	$351.68
6"	$657.13	$676.84	$697.15

B. Variable Rate. In addition to the base rate set forth above, the customer shall be charged the following rate per 100 cubic feet of water consumed:

Existing	1/1/07	1/1/08
$1.62	$1.67	$1.72

All water rate charges on water utility bills mailed between January 1, 2007, and December 31, 2007, shall be based on rates as reflected in this section corresponding with said time period. Thereafter, all water rate charges on water utility bills mailed on or after January 1, 2008, shall be based on rates as reflected in this section corresponding with said time period until a new ordinance is adopted amending the same.

C. Meter Installation Charges.

1. New service line and meter installation charges are fixed as follows:

a. 3/4" $550.00

b. 1" $800.00

2. The actual cost of street restoration (with regard to all surface streets) shall be added to any meter installation charge, if applicable.

3. When approved by the city engineer, new service lines installed by a developer on a plat shall be credited as follows:

a. 3/4" $175.00

b. 1" $200.00

D. All rates set forth in this section shall be exclusive of any applicable taxes.

E. *Repealed by Ord. 3618.* [Ord. 3618 § 2, 2006; Ord. 3616 §§ 1 – 3, 2006; Ord. 3400 § 1, 2002; Ord. 3339 § 2, 2000; Ord. 2974 §§ 1 and 2, 1994; Ord. 2898 § 1, 1992; Ord. 2880 § 1, 1992; Ord. 2657 § 1, 1988; Ord. 2361 § 1, 1983; Ord. 2339 § 2, 1982; Ord. 2305 § 2, 1982; Ord. 2255 § 1, 1981; Ord. 2211 § 1, 1981; Ord. 2197 § 1, 1981; Ord. 2139, 1980; Ord. 1963 § 1, 1977; Ord. 1898 § 1, 1977; Ord. 1709 § 1, 1974; Ord. 1457 § 1, 1970; Ord. 1385 § 2, 1968; Ord. 1263 § 1, 1967; Ord. 901, 1961; Ord. 786 § 2, 1959].

7.30.035 Water and sewer utility connection charges.
A connection charge shall be paid by each new customer connecting to the city's water or sewer system in accordance with the following requirements:

A. Sewer System. The sanitary sewer connection charge shall be equivalent to $730.00 per ERU added as a result of the connection of the development.

A multifamily residential unit shall be considered equivalent to 0.67 of an ERU and the development services director shall estimate the average winter water consumption for connections of buildings, structures or uses other than residences and prorate the connection rate according to the equivalent number of ERUs such building, structure or use represents and establish an appropriate connection charge.

B. Water Connection Charge. The connection charge shall be based upon the size of the meter installed:

Meter Size (inches):	Flow Factor	Proposed Charge
5/8 & 3/4"	1	$908
1"	2.5	$2,270
1.5"	5	$4,540
2"	8	$7,264
3"	16	$14,528
4"	25	$22,700
6"	50	$45,400
8"	80	$72,640

C. No water connection charge shall be levied for connections to water mains installed pursuant to Local Improvement District Nos. 115, 146 and 152 by properties which participated in the establishment of said local improvement districts. [Ord. 3339 § 3, 2000].

7.30.036 Sewer special connection districts.
A. A connection charge shall be paid by each new customer connecting to the city's sewer system within the following described district(s). This special connection charge is based upon the actual cost of constructing improvements which relate directly and exclusively to homes within the district(s) and which are, because of the special nature of the construction, separate and distinct from the overall costs of the system paid by a customer pursuant to ECC 7.30.035. These charges shall be in addition to the charges paid by a new customer pursuant to ECC 7.30.035 and do not duplicate any costs contained in the underlying sewer utility connection charge.

B. 88th Avenue West Sewer Special Connection District.

1. Properties addressed as 21903, 21904, and 21911 88th Avenue West shown on Exhibit A attached to the ordinance codified in this section maintained on file in the city clerk's office and any subdivision, lot line adjustment or reconfiguration of the lots or the property represented by such addresses shall pay a special connection fee, to be paid in full at the time of connection to the sewer system, of $2,941.39 per lot.

2. Due to the significant additional sewer system construction that will be required at the property owners' expense to connect these properties to the sewer system after completion of the sewer project by the city, these properties may defer connection and shall not be required to connect to the sewer system within the time limit requirements of ECDC 18.10.010 and ECC 7.30.040.

3. The owner of any of these properties that does not connect to the sewer system within the time limits in accordance with ECDC 18.10.010 shall, upon connection to the sewer system, pay the above established special connection fee, increased based upon the Department of Labor Bureau of Labor Statistics Consumer Price Index for construction for the Seattle-Bellevue-Everett area from the effective date of the ordinance codified in this section to the time of connection to the sewer system. [Ord. 3657 § 1, 2007].

7.30.040 Utility charges – Sanitary sewer.
The utility charges for sanitary sewer service set forth in this section shall be added to and made a part of the bimonthly or monthly rates for water supplied through the meters as set forth in ECC 7.30.030:

A. The following rates shall be charged on all billings after the effective date shown with respect to the following customers and/or service:

	Effective Dates	Connected	Unconnected
1. Single-family residences (bimonthly)			

1/1/2004	$51.80	$8.35
1/1/2006	$50.64	$8.16

2. Duplexes, apartment houses, condominiums and other multi-unit residences (bimonthly)

1/1/2004	$41.62/unit	$8.35/unit
1/1/2006	$40.69/unit	$8.16/unit

3. Duplexes, apartment houses, condominiums and other multi-unit residences (monthly)

1/1/2004	$20.81/unit	$4.18/unit
1/1/2006	$20.34/unit	$4.09/unit

4. All other customers (monthly)

Fixed Rate:

1/1/2004	$2.95	N/A
1/1/2006	$2.88	N/A

Volume Charge:

1/1/2004	$3.34/ccf*	N/A
1/1/2006	$3.26/ccf*	N/A

*Per 100 cubic feet of metered water consumption.

B. For customers who are not served by city waterlines but who are connected to city sewers, the charges shall be the same as set forth in subsection A of this section and its subparagraphs.

C. These rates do not apply to industries or manufacturing concerns which have industrial wastes. These, together with other activities not covered in this chapter, shall be dealt with on a special basis and have special rates set for the particular business by the water/utility administrative staff, subject to review and approval by the city council.

D. All property owners within an area served by a sanitary sewer system in the city of Edmonds are hereby directed and compelled to connect their private drains and sewers to the city system. Failure to do so within 30 days of written notice to connect by the city shall subject the property owner to a monthly penalty equal to that charge imposed by subsections A, B, and/or C above. Said penalty shall be billed to the property owner, and they shall be subject to payment, collection and enforcement in all respects as though they were utility customers of the city. All penalties collected shall be considered revenues of the sewer utility system. [Ord. 3570 § 2, 2005; Ord. 3400 § 2, 2002; Ord. 3339 § 4, 2000; Ord. 3195 § 1, 1998; Ord. 2823, 1991; Ord. 2657 § 2, 1988; Ord. 2551, 1986; Ord. 2361 § 2, 1983; Ord. 2255 § 2, 1981; Ord. 2197 § 2, 1981; Ord. 2181 § 1, 1980; Ord. 2147, 1980; Ord. 2139, 1980; Ord. 1898 § 2, 1977; Ord. 1465, 1970; Ord. 1458 § 1, 1970; Ord. 1264 § 1, 1967; Ord. 1051, 1964; Ord. 786 § 3, 1959].

7.30.045 Special connection charge.
In addition to any other charges prescribed by this chapter, a special connection charge shall be paid by the owner of any property, residential dwelling unit, or other structure that may hereafter connect to the sanitary sewer improvements constructed by any local improvement district formed by the city and for which no assessment was imposed or charged under the said LID. The special connection charge for each property, residential dwelling unit, or other structure so connected shall be equal to the amount of the assessment that would have been levied against such property, residential dwelling unit, or structure under the final assessment roll of the appropriate LID if the said property, residential dwelling unit, or other structure had been so assessed, together with interest thereon at the rate established by the ordinance authorizing issuance of the bonds for said LID, from the time of such authorization until the time of connection. The special connection charge shall be paid in a lump sum prior to connection to the sanitary sewer. The special connection charge provided for in this section shall apply only where the debt used to finance the local improvements has not yet been fully retired through assessment payments. If such debt has been fully retired through payment of such assessments, the special connection charge shall not apply. [Ord. 3332 § 1, 2000].

7.30.050 Unauthorized use of water.
It is unlawful for any person, firm, corporation, or other organization of any type whatsoever to take, or allow to be taken, water from the Edmonds water system without a valid permit issued by the Edmonds water division. Any person, including the officers and/or directors of any firm, corporation or other organization of any type, who shall take water from the Edmonds water system without such permit shall be guilty of a misdemeanor and subject to the penalties set forth in ECC 5.50.020. In addition to such penalties there shall be a charge by the water division for the taking of such water at a minimum of $100.00 plus $1.00 per 100 cubic feet of water taken. Said water charge may be

charged against the premises from which the water was taken and enforced by available liens or, where applicable, against the individual, firm, corporation or other organization of any type, including the officers and directors thereof, who took or caused to be taken said unauthorized water. References herein to water permits shall include all permits required for water usage within the city of Edmonds, or from the Edmonds water system, as required by the Edmonds City Code. [Ord. 1562, 1971].

7.30.060 Severability.
Should any section, clause or provision of this chapter be declared by the courts to be invalid, the same shall not affect the validity of the chapter as a whole or any part thereof, other than the part so declared to be invalid. [Ord. 786 § 6, 1959].

7.30.070 Water, sewer and stormwater rate reductions for low income citizens.
A. Definitions. For the purposes of implementing water, sewer and stormwater rate reductions under the provisions of this section, the following words or phrases shall have the following definitions:

1. “Low income citizen” shall mean a person who has established Edmonds as their residence and whose total disposable income including that of his or her spouse or cotenant does not exceed the amount specified in RCW 84.36.381(5)(b) as the same exists or is hereafter amended.

2. The definition of terms such as “residence,” “total disposable income,” “combined disposable income,” and other such terms used in this section shall be given those meanings established by RCW 84.36.383 as the same exists or is hereafter amended. In the event that any provision of the Revised Code of Washington incorporated by reference or implication in this definitional section shall be amended, such amendment shall be deemed to be incorporated within or utilized in interpretation of this section.

B. Low income citizens shall be given reductions in the water, sewer and stormwater rates as those rates are established from time to time by the city council:

1. A rate reduction of 30 percent shall be afforded those low income citizens who meet the qualifying income and asset levels established by RCW 84.36.381(5)(b)(i) as the same exists or shall hereafter be amended.

2. A 50 percent rate reduction shall be afforded those low income citizens qualifying under the provisions of RCW 84.36.381 (5)(b)(ii).

3. No rate reduction shall be afforded to any person shown as a dependent on the income tax return of any other individual, whether or not such person resides at the location for which the rate reduction is sought, unless the total combined disposable income of the applicant, along with their spouse, cotenant and all family members shown on the income tax return in which the applicant is shown as a dependent, meets the standards established by this section.

C. The administrative services director is authorized to establish an application for low income citizens rate reduction applications. The application shall be provided without cost by the utility billing division of the city and shall include such information as may reasonably be required by the administrative services director to verify eligibility. [Ord. 3629 § 9, 2007; Ord. 2807 § 1, 1990; Ord. 2805 § 2, 1990; Ord. 2777 § 1, 1990].

7.30.080 Reserved.

[Ord. 2777 § 2, 1990; Ord. 2773 § 1, 1990; Ord. 2440, 1984; Ord. 2198 § 2, 1981].

7.30.090 Penalties.
A. Any person knowingly making any false or misleading statement in any application and/or renewal for rate reduction to any city employee with intent to secure the rate reduction authorized herein shall be guilty of a misdemeanor and punished as set forth in ECC 5.50.020.

B. Further, in the event of any such misrepresentation, the water rate may be increased retroactively and assessed against the applicant and/or premises as may be allowable by law including but not limited to lien procedures. [Ord. 2198 § 3, 1981].

This page of the Edmonds City Code is current through Ord. 3773, passed December 15, 2009.
Disclaimer: The City Clerk's Office has the official version of the Edmonds City. Users should contact the City Clerk's Office for ordinances passed subsequent to the ordinance cited above.

City Website: http://www.ci.edmonds.wa.us (http://www.ci.edmonds.wa.us)
City Telephone: (425) 771-0245
Code Publishing Company (http://www.codepublishing.com/)

Chapter 7.40
FIRE PROTECTION WATER SERVICE

Sections:

7.40.010 Application – Information.
7.40.020 Ownership and costs.
7.40.030 Fire service to be metered – Second service to premises.
7.40.040 Fire service monthly service charges.
7.40.050 Violation – Penalty.

7.40.010 Application – Information.
Water shall be supplied for fire protection purposes only after application has been made by the customer or his agent and approved by the water division and fire department. Sufficient information shall be supplied at the time of making application for service to enable the water division to fully determine the nature and extent of the proposed system. Detailed drawings of the proposed system shall be provided, which shall contain adequate information showing the locations and sizes of the system's piping and appurtenances. [Ord. 1561, 1971].

7.40.020 Ownership and costs.
All fire service connections shall be installed by and remain the property of the water division. The expense for all labor, materials and equipment rental, including street restoration required for tapping mains, making connections, placing valves, meters, or any other protective device deemed necessary by the water division to prevent the unauthorized use of water, including the testing of completed work, meter pits and/or vaults, shall be paid for by the customer. [Ord. 1561, 1971].

7.40.030 Fire service to be metered – Second service to premises.
Fire service connections shall be supplied only through an approved fire service meter or a detector check meter. In the case of premises for which both fire protection and other water service for such uses as domestic, commercial, industrial, or manufacturing purposes is supplied, there may be two service installations made to the premises: one for fire service only and one for other water service. These service functions may also be combined in a single service connection with the approval of the water division.

In the event two separate service connections are installed, the fire protection system so served shall consist of an automatic sprinkler system only, without additional outlets which could normally be used for other than fire suppression purposes. [Ord. 1561, 1971].

7.40.040 Fire service monthly service charges.
A. The monthly rates for inspection and maintenance of detector check systems are fixed as follows:

Fire Service or Detector Meter Size	Bimonthly Service Charge
Up to 4"	$12.34
6"	$21.59
8"	$30.81

Water used through the fire service line for fire suppression purposes and limited testing of the system will normally be furnished without any charge in addition to the bimonthly minimum charge set forth for fire service meter or detector check meter.

B. If a detector check meter proves, or proof is otherwise provided, leakage or unauthorized usage of water which is not for fire suppression purposes, the customer shall pay for all water used at the applicable metered rate. The rates for water so used are fixed as follows: at the time of first written notice from the city water division the applicable rate shall be the same as the domestic rate for comparable size of domestic water meter for unauthorized use over 100 cubic feet per month; in the event the unauthorized use again occurs after the period of time specified in the written notice from the water division, the rate shall be double the domestic rate for a comparable size domestic water for such unauthorized use over 100 cubic feet per month.

C. References made by this chapter as to existing metered rates shall be to Chapter 7.30 ECC. [Ord. 3629 § 10, 2007; Ord. 3457 § 1, 2003; Ord. 1561, 1971].

7.40.050 Violation – Penalty.

In addition to all civil rights of collection, liens, shut-offs and other remedies available to the city of Edmonds as prescribed by statute and ordinance for unauthorized use and/or nonpayment of charges, any person, firm, corporation or other organization, including any officers, directors and managers thereof, who violate any provision of this chapter shall be guilty of a misdemeanor and subject to penalties as set forth in ECC 5.50.020. [Ord. 1561, 1971].

This page of the Edmonds City Code is current through Ord. 3773, passed December 15, 2009.
Disclaimer: The City Clerk's Office has the official version of the Edmonds City. Users should contact the City Clerk's Office for ordinances passed subsequent to the ordinance cited above.

City Website: http://www.ci.edmonds.wa.us (http://www.ci.edmonds.wa.us)
City Telephone: (425) 771-0245
Code Publishing Company (http://www.codepublishing.com/)

Chapter 7.60
COMBINED UTILITY

Sections:

7.60.010 Combination of combined water and sewer utility and stormwater management utility.
7.60.020 Separate rates – Accountability.
7.60.030 Utility assistance fund.

7.60.010 Combination of combined water and sewer utility and stormwater management utility.
The city is maintaining and operating a combined water supply and distribution system and sanitary sewage disposal system and, by Chapter 7.50 ECC, has created a stormwater management utility. Pursuant to the provisions of RCW 35.67.331, the present combined water and sewer utility, and the stormwater management utility, together with all additions, extensions and betterments thereof at any time made, are hereby combined into a single utility; provided, that the accounting procedure for each system shall be kept separate as required by RCW 35.37.010. The combined water, sewer and stormwater management utility of the city, together with all additions, extensions and betterments thereof at any time made, shall hereinafter be called the “combined utility.”

7.60.020 Separate rates – Accountability.
The council declares its intent to establish rates for the combined water and sewer utility and stormwater management utility. In order to better account for the costs of the respective components of the combined utility, the administrative services director is directed to maintain such separate funds and accounting structures as may be necessary to discretely account for the costs, expenses and revenues of each component utility. When the staff makes recommendations for the establishment, increase or decrease in any rate, it is directed to provide supporting data which separately reflects such costs, expenses and revenues for each component utility.

7.60.030 Utility assistance fund.
A. Purpose. The city council establishes the utility assistance fund in order to accept, hold and dispense funds contributed either from the city's general fund, from charitable and civic organizations or from individual rate-payers who have made donations for the assistance of a category of citizens known under Article 8, Section 7 of the Washington State Constitution as the “poor and infirm” and under other provisions of other state statutes and local ordinance as the low-income, elderly and disabled.

B. Disbursement. Such monies as are contributed shall be held and disbursed to persons qualifying for the assistance programs established by ECC 7.30.070 and the provisions of state law incorporated in that section. Disbursements may be made, to the extent of monies held within the fund, for utility charges, connection fees, and other exactments levied by the utilities which, taken as whole, constitute the combined utility. The monies may be expended for purposes which generally benefit the public health, safety and welfare or are designated by the donor of the fund.

C. The administrative services director or his/her designee is hereby authorized to adopt forms and procedures for the acceptance of contributions to the fund and for the disbursement of monies from the fund. [Ord. 3393 § 1, 2002].

This page of the Edmonds City Code is current through Ord. 3773, passed December 15, 2009.
Disclaimer: The City Clerk's Office has the official version of the Edmonds City. Users should contact the City Clerk's Office for ordinances passed subsequent to the ordinance cited above.

City Website: http://www.ci.edmonds.wa.us (http://www.ci.edmonds.wa.us)
City Telephone: (425) 771-0245
Code Publishing Company (http://www.codepublishing.com/)

APPENDIX M

THIS PAGE INTENTIONALLY LEFT BLANK

Tom Lindberg

From: Roger Eberhart [rogere@ovwater.com]
Sent: Wednesday, September 22, 2010 12:40 PM
To: Tom Lindberg
Subject: Edmonds Comprehensive Plan
Attachments: Olympic View Water and City of Edmonds Water Systems Interties.doc

Tom,

I have reviewed the Comp Plan you sent the other day. As far as our relationship with the Edmonds Water System is concerned the only significant issues are the multiple interties that we have. These are detailed in your plan on page 2-11 and on Figure 2-2.

Attached for your review is a paper prepared by the Operations Manager describing our interties. The red text is my additions for our comp plan consultant. You will see that we have HGL zones 505 and 415 that are not detailed on your Figure 2-2. These are PRV sub-zones of our 540 Low Zone.

If you wish to discuss these issues in further detail please call.

Roger C. Eberhart, PE
General Manager
Olympic View Water and Sewer District
23725 Edmonds Way
Edmonds, Washington 98926
425-774-7769
425-670-1856 (Fax)
rogere@ovwater.com

Olympic View Water and City of Edmonds Water Systems Interties

As of 7/29/2010

1. **Chinook road and Pine Street: Station Number 2100.**
   Because of the hydraulic gradient issue this intertie should be considered one way from Olympic View to Edmonds Intertie is inside a large vault with lockable lid. Existing in the vault is 2 - 8" gate valves with a length of 8" pipe in between. Valve AA0 –V2 is normally closed. There are no meter or flow control devices. The hydraulic grade on Olympic view side is 353' and on the Edmonds side is 325'. Recommended improvements to the vault would be the installation of 8" meter and 8" PSV. The hydraulic grade would allow water to flow into the Edmonds system but would be difficult to flow from Edmonds into the Olympic view system. The pressure would have to be lowered to the point that may not reach the Woodway tank. Without the ability to flow water into the Woodway tank, any water coming from Edmonds would serve only the Woodway zone.

2. **7th Ave S and Elm intertie: Station Number 2300**
   Approximately located at 1220 7th Ave. This intertie consists of 2-8" valves with a section of 8" pipe in between. Our grid map shows Edmonds main as a 6" cast iron pipe. There are no meter or flow control devices. The hydraulic gradient is 415' on the Olympic View side and 486' on the Edmonds side. The intertie is controlled by Olympic view valve B1-V26 and adjacent Edmonds valve. This is a PRV zone and would only serve the customers within the 415' zone.

3. **7th Ave S and Birch Place: Station Number 2400**
   This intertie consists of 2-8" valves with a section of 8" pipe in between. Our grid map shows Edmonds main as a 6" cast iron pipe. There are no meter or flow control devices. The hydraulic gradient is 415' on the Olympic View side and 486' on the Edmonds side. The intertie is controlled by Olympic view valve B1-V18 and adjacent Edmonds valve. This is a PRV zone and would only serve the customers within the 415' zone.

4. **8th Ave and Elm Street: Station Number 2500**
   This intertie consists of 1-8" valve and 1-6" valve. There are 2-2"Blow offs inside a manhole with 2-2" gate valves on the ends located in front of 1206 8th Ave. Valve B1-V28 is normally closed and is located at the intersection of Elm way and 8th Ave. The grid map shows an 8" X 6" reducer on the pipe outside the man hole. The hydraulic gradient is 505' On Olympic View side and 486' on the Edmonds side. There are no meter or flow control devices. For this intertie to work there must be a connection between the two blow off's. This is a PRV zone and would only serve the customers with in the 505 and 415' zone.

5. **9th Ave and Elm Way: Station Number 2600**
   Approximately located at 1139 9th Ave. This intertie consists of 2-8" Gate valves located outside of a man hole with an 8" section of pipe between. Inside the man hole are 2-compression type fittings that connect the pipe together. Valve C1-V2 is normally closed. The hydraulic gradient is 505' on the Olympic View side and 486' on the Edmonds side. There are no meter or flow control devices. This is a PRV zone and would only serve the customers within the 505' and 415 zone.

6. **224th SW and 76th Ave W: Station Number 2000**
   This intertie consists of 2-8" gate valves 1-6" meter 1-6" PSV located in a vault with a lockable lid. The Hydraulic gradient is 540' on Olympic View side and 596' on the Edmonds side. Approximant capacity is 2,000 GPM. This

intertie can be used to fill the 1.5 tank and then be pumped to the 2.5 tank and out into the distribution system. Valve E2-V42 is normally closed. At this time there is no local agreement with the City of Edmonds to use any of the interties.

7. **236th ST SW and Highway 99: Future Station Number 2700 if this connection is ever made.**
   This intertie consists of 1-12" valve on an Edmonds pipe located at the intersection of 236th and Highway 99. This pipe was constructed for a future intertie with Olympic View system. To complete this intertie the construction of a vault with a water meter, PSV, and wet tap to Olympic View's 10" DI pipe would need to be done. The hydraulic gradient is 612' on Olympic View side and 596' on the Edmonds side. Edmonds 12" pipe is located on the west side of highway 99 at the center line of 236th and in the transit lane.

8. **Adjacent Fire Hydrants along 220th ST SW: Don't include any of this in the comp plan.** There are several places along 220th where Olympic View and the City of Edmonds have adjacent fire hydrants. In an emergency situation, fire hose could be connected to these hydrants and run across 220thST SW. The locations are:

9. 220th and 98th Ave W hydrant C1-16 & 21930 Edmonds side.

10. 95th Ave and 220th Hydrant C1-6 and 9417 Edmonds side.

11. 90th and 220th Hydrant D1-1 and 8929 Edmonds side

12. 86th Ave and 220th Hydrant D1-16 and 8526 220th Edmonds side

13. 8224 220th Church of God Hydrant E1-21 and 8121 220th Edmonds side

14. 80th and 220th Hydrant E1-6 and 7923 220th Edmonds side

City of Seattle
Seattle Public Utilities

October 29, 2010

Mr. Thomas C. Lindberg, P.E.
Principal Engineer, MSA, Inc.
2707 Colby Ave Suite 1110
Everett, WA 97201

Dear Mr. Lindberg,

Thank you for the opportunity to review and comment on the Agency Review Draft of the 2010 City of Edmonds Comprehensive Water System Plan. There are limited places for Seattle Public Utilities to comment in regards to this plan. However, there are a few comments that are summarized below.

1) Chapter 7, pg 7-4 Table 7-3 – The SPU Supply Station Capacity is listed as 5,500 gpm. Based on the hydraulic grade line (HGL) in the current wholesale contract with SPU (1982 version), our current hydraulic model suggests the available capacity may be significantly less than that flowrate. In addition, the City of Edmonds is in negotiations for a new long-term contract with SPU. The new contract should contain more specific conditions regarding flow, HGL, and use in regards to this intertie.
2) Figures 2-1, 2-3, and 9-1 – These three figures show the "City of Seattle" at the King/Snohomish County border. We are not sure if this is to label the water purveyor or the City. If it is the City, the "City of Shoreline" should be the designation. If it is the water purveyor, "Seattle Public Utilities" would be the more common designation as not to mislead the reader.

Overall, SPU staff is appreciative of the effort put forth in the writing of this document and the information contained within it. Thank you for the opportunity to comment. If you have any questions on our comments, please contact me at 206-684-0839 or joan.kersnar@seattle.gov or Eric Thorberg at 206-733-9644 or eric.thorberg@seattle.gov.

Sincerely,

Joan M. Kersnar

Joan M. Kersnar, P.E.
Drinking Water Planning Manager

cc: Robert English, P.E., City Engineer, City of Edmonds
Dan Swenson, Wholesale Contracts Manager, Seattle Public Utilities
Judi Gladstone, Water Policy Advisor, Seattle Public Utilities

Ray Hoffman, Director
Seattle Public Utilities
700 5th Avenue, Suite 4900
PO Box 34018
Seattle, WA 98124-4018

Tel (206) 684-5851
Fax (206) 684-4631
TDD (206) 233-7241
ray.hoffman@seattle.gov

http://www.seattle.gov/util

An equal employment opportunity, affirmative action employer. Accommodations for people with disabilities provided on request.

STATE OF WASHINGTON
DEPARTMENT OF HEALTH
NORTHWEST DRINKING WATER REGIONAL OPERATIONS
20435 72nd Avenue South, Suite 200, Kent, Washington 98032-2358

November 17, 2010

JAMES WAITE
CITY OF EDMONDS
7110 210TH ST SW
EDMONDS WA 98026

RE: City of Edmonds, ID# 22500
Snohomish County
Water System Plan – 2010
Submittal #10-0901

Dear Mr. Waite:

Thank you for submitting the Water System Plan (WSP) for the City of Edmonds (the City) received in this office on September 10, 2010. We have reviewed the plan and offer the following comments. These comments must be adequately addressed prior to approval of the WSP.

System Analysis

1. In the summary of the calibration of the hydraulic model it indicates that the model was calibrated using field flow and pressure data; how closely did the model match existing conditions?

2. Table 7-3 summarizes the capacity of the Five Corners pump station. What would happen if the AWWD source is not available and the system had to run only on the Seattle source? What would be the limiting factors under these conditions?

3. In terms of reliability, our Design Manual recommends that pump stations be able to provide MDD with the largest pump out of service. How does the Five Corners pump station meet that level of reliability? Has the City determined what level of reliability they would like to provide?

4. Improvements to the Five Corners pump station have been referenced in this plan as being contained in the previous water system plan. In reviewing the previous plan, it seems that the improvements identified were more control improvements. However, Chapter 9 indicates that other improvements may be/may have been included in the upgrade. Please clarify what the specific improvements are to the Five Corners pump station.

5. The plan indicates that the Seattle intertie connection is used only when pressures drop below a pre-set level; how often has the intertie been put into use? How is this expected to change in the future, if at all? Are there any special O&M functions (like flushing the intertie on a routine basis or before use) related to the intertie?

6. It appears that we will need to add all of the manually operated emergency interties to your Water Facilities Inventory. We also recommend that you have agreements in place with these utilities for operation of the emergency interties.

Operations & Maintenance

7. Please provide an update of your cross connection control program; this should include the numbers and types of customer surveys sent out, a list of high hazard devices that have been identified, and tracking of required annual testing of devices.

8. The coliform monitoring plan in Appendix K references a list of sample sites/repeat locations as attached, but it was not included. Please provide this list.

9. Please expand the Public Notification procedures in chapter 8 to include the City's response to an acute primary MCL violation. Because these types of violations typically require a 24-hour public notice period, the City may need/want to establish methods of ensuring the notice gets out within the required timeframe. If this is already included in your emergency response plan, we would appreciate a summary of this portion of the plan.

Other Documentation

10. Please provide a copy of the new agreement with AWWD.

11. The water system must meet the consumer input process outlined in WAC 246-290-100(8). Please include documentation of a consumer meeting discussing the WSP, prior to DOH approval of the WSP.

12. Prior to DOH approval, the City's governing body must approve and adopt the WSP. This is a new requirement resulting from the Municipal Water Legislation.

13. Please provide copies of any comments made by adjacent purveyors, along with your response to those comments.

We hope that you have found these comments to be clear, constructive and helpful in the development of your final draft WSP. We ask that you submit the revised WSP on or before **February 18, 2011**. In order to expedite the review of your revised submittal, please include a cover letter summarizing how each of the above comments was addressed in the revised WSP and where each response is located (i.e., page numbers, Appendices, etc.)

Regulations establishing a schedule for fees for review of planning, engineering and construction documents have been adopted (WAC 246-290-990). Please note that we have included an invoice in the amount of $5484.00 for the review of the Water System Plan. This fee covers our cost for review of the initial submittal, plus the review of one revised document. Please remit your complete payment in the form of a check or money order within thirty days of the date of this letter to: **DOH, Revenue Section, and P.O. Box 1099, Olympia, WA 98507-1099.**

Thank you again for submitting your revised Water System Plan for our review. If you have any comments or questions concerning our review, please contact me at (253) 395-6771.

Sincerely,

Richard Rodriguez

Richard Rodriguez
WSDOH Regional Planner

cc: Jolyn Leslie, DOH
Jacque Klug, DOE-NWRO
Gary Idleburg, Snohomish County Planning and Development Services
Snohomish County Health District
Thomas Lindberg, P.E., Murray, Smith & Associates, Inc.

THIS PAGE INTENTIONALLY LEFT BLANK

2707 Colby Avenue, Suite 1110 ▪ Everett, Washington 98201-3566 ▪ www.msa-ep.com